NO. 65 NOTES FROM THE SHOP $3.50

Woodsmith®

No. 65 October 1989

Woodsmith

Editor **Donald B. Peschke**
Design Director **Ted Kralicek**
Managing Editor **Douglas L. Hicks**
Assistant Editors **Douglas M. Lidster**, **Kent A. Buckton**, **Terry J. Strohman**
Project Designer **Ken Munkel**
Technical Illustrators **David Kreyling**, **Cary Christensen**, **Rod Stoakes**, **Chris Glowacki**
Customer Service **Linda Morrow, Mgr.**, **Pat Koob**, **Lisa Thompson**
Project Supplies **Leslie Ann Gearhart**
Controller **Paul E. Gray**
Computer Operations **Ken Miner**
Administrative Assts. **Cheryl Scott**, **Sandy Baum**
Sourcebook **Jean Carey**
Building Maintenance **Archie Krause**

WOODSMITH STORES

General Manager **Steve Krohmer**
Marketing Manager **Steve Dozier**
Store Managers:
St. Louis, MO **Jon Behrle**
Berkeley, CA **Michael DeHaven**
Des Moines, IA **Kent Welsh**

WOODSMITH (ISSN 0164-4114) is published bimonthly (February, April, June, August, October, December) by Woodsmith Publishing Co., 2200 Grand Ave., Des Moines, IA 50312.
Woodsmith is a registered trademark of Woodsmith Publishing Co.
©**Copyright 1989** by Woodsmith Publishing Co. All Rights Reserved.
Subscriptions: One year (6 issues) $15.95, Two Years (12 issues) $27.95. Canada and Foreign: add $2 per year, U.S. funds only. Single copy price, $3.50.
Second Class Postage Paid at Des Moines, Iowa and at additional offices.
Postmaster: Send change of address to Woodsmith, Box 491, Mt. Morris, IL 61054.
SUBSCRIPTION QUESTIONS? Call 800-435-0715 (IL residents: 800-892-0753). 7:30 AM to 8:30 PM, CST, weekdays.
SAMPLE COPY: We will send a free sample copy of *Woodsmith* to anyone. Just send us his/her name and address.

EDITOR'S COLUMN

Sawdust

Don't show this issue to anyone under the age of 10 . . . unless you've got some shop time blocked out.

I can't remember two projects that have had such a gleeful response from our collection of *Woodsmith* kids as the Rocking Horse and the Toy Train in this issue.

The Rocking Horse was an instant hit. The only problem was dealing with the chorus of, "It's my turn." The Toy Train was just as much fun. I was only disappointed that I couldn't get through my discussion of how the connectors are used to join the sections of track. About halfway through my explanation, these Lego-wise kids already had the track assembled.

Well, that's the whole idea behind this issue: gifts for the Christmas season that will soon be upon us.

ROCKING HORSE. The Rocking Horse turned out to be more of a challenge to build than I expected. It's more sculpture than cabinetry, and requires a sequence of assembly that I had to stumble my way through the first time.

Fortunately, we got all the details worked out, and then decided to add more details. First, we added a mane and tail. Then we added a real leather saddle and a bridle, too. Although the horse could be built without these extras, I think it added a lot from my "adult" point of view. Kids will love it either way.

THE TRAIN. The fun part of the Toy Train was making the track. The track is designed so it's easy to make — and so more sections can be added any time in the future. Once we designed it, the hardest part was walking through the office as new sections of track found their way in more amazing patterns and stretching to new parts of the building.

OVAL BOX. There are two reasons to build the Oval Box shown in this issue. First, it makes a nice gift. But the real reason, is that it uses a technique that's just plain fun from a woodworker's standpoint.

The box is based on the shape of a beveled-edge oval mirror. It requires transferring the shape of this mirror to a template. Then the template is used with a router to rout out the recess in the lid for the mirror and a complementary recess in the base for jewelry.

The idea is the same no matter what the shape. If you find an intriguing pattern of any shape, you can make a template from it and rout out that shape.

CAUTION. I want to point out the note of caution we've put on the next page under the heading "ROUTING DIRECTION."

We try our best to show woodworking techniques that are both safe and yield the best results. But safety should always come first. Read the Owner's Manual that comes with the tools you're using. Follow the Safety Instructions.

No matter what you read in *Woodsmith* or any other magazine or book, or what someone says, *you have to decide what's safe for you*. Think about what you're doing. If you ever feel any hesitation about doing something, don't do it.

NEW FACES. As we get more involved with offering Project Supplies through the mail, customer service is becoming more important. In fact, the whole reason for this department is to provide the best service we can.

To help accomplish that goal, I've asked Linda Morrow to manage our customer service department. (Linda has actually been working here with Steve Krohmer and the *Woodsmith Stores* for the past year.)

Now I've asked her to take charge of fulfillment of the Project Supplies. This means she has to get our new computer system up and running, train new staff, and work day and night to make sure everything runs smoothly and all our customers are happy.

"No problem," she said, looking a little weary already. I told her she could take a day off next spring to rest up.

By the way, Sandy Baum who used to manage our customer service department (when it was mostly subscription management) is now working as my assistant. She's helping me with the business side of things — circulation, renewals, direct mail. It's great to have her help.

EDITOR NEEDED. We're looking for at least one good editor to join our staff. The problem has been finding someone with the right mix of talents.

Most magazines require editors with editing and writing skills. At *Woodsmith*, we're looking for someone with a first-hand knowledge of woodworking, and an interest in passing that knowledge on to others.

If you're a woodworker and have some experience with writing, or at least a sincere interest in learning how to write, maybe this is the job for you. Please send your resume to: Doug Hicks, Managing Editor

Doug and I will send you a package of information about the job and the responsibilities involved.

NEXT ISSUE. The next issue of *Woodsmith* (No. 66) will be mailed during the week of December 18, 1989.

Tips & Techniques

GLUING ON A HANDLE

How do you glue a handle into a hole without smearing glue on the end of the handle as it goes in the hole? *(Editor's Note: We faced this problem on the handle for the Rocking Horse shown in this issue.)*

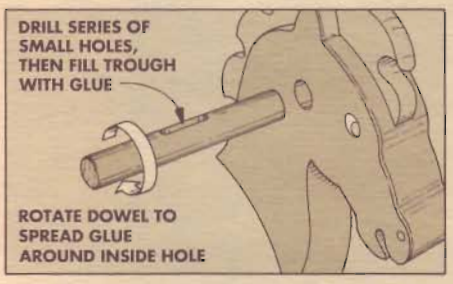

If the glue is spread around the inside of the hole, the end of the dowel gets smeared with glue as it's inserted. If glue is spread on the center section of the dowel, it's usually scraped off as the dowel is pushed through the hole. Either way, it usually makes a mess.

I solved this problem by cutting a trough for the glue in the center section of the handle. As the dowel is turned in the hole, the trough distributes the glue around the *inside* of the hole, see drawing.

To make the glue trough, I drilled a series of small overlapping holes in the dowel. The drill size and hole depth are relative to the diameter of the dowel you use. I use ¼" holes ¼" deep on a 1"-dia dowel.

Fill the trough with glue, then insert the dowel through the hole (trough-side up). After centering the dowel on the workpiece, quickly rotate it a few times to smear the glue around the hole.

Stanley Stripling
Stockbridge, Georgia

ROUTING DIRECTION

In *Woodsmith* No. 64 we showed a drawing of how to rout a ¼" round-over on a chair slat (Fig. 6 on page 21).

I want to say this bluntly: this drawing could be misinterpreted and could be very dangerous.

The original drawing (left, below) shows a router table with a ¼" round-over bit. The chair slat is being pulled through the bit to round over the edge. We left out two important details on this drawing.

1. *The guard should be in place whenever the bit is exposed.* Typically we don't show the guard in the drawings so you can see the relationship of the bit to the wood. Nevertheless, when you make the cut, the guard should always be securely mounted on the router table to protect your fingers.

2. *You should feed against the rotation of the bit.* The arrow showing the direction of feed was left out of the drawing. It may look like the workpiece is being pushed (right to left in the drawing). The proper direction of feed is left to right, as in the new drawing, below.

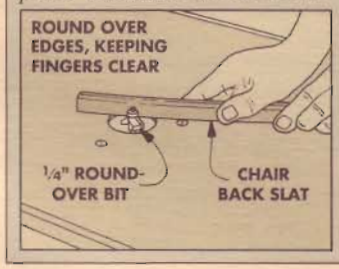

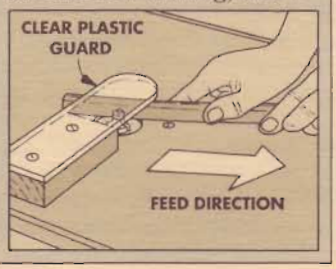

DRUM SANDER VACUUM

Mounting a drum sander on a drill press is a great way to sand the edge of a workpiece. But it produces very fine sawdust that's a nuisance and unhealthy to breathe. To cut down on the sawdust, I built a box that works with my shop vacuum.

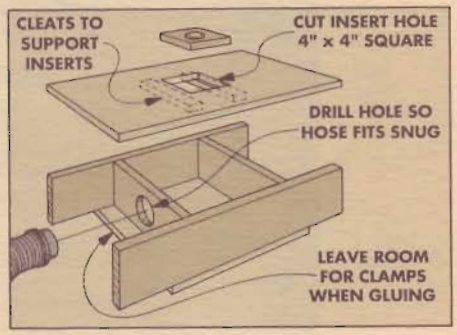

To make the vacuum box, rip enough ¾"-thick stock to form an H-shaped frame. I cut all the frame pieces 3½" wide (high).

The two cross members are cut to length so they're 1½" less than the depth (front to back) of your drill press table. The front and back frame pieces are cut to length so they're about twice as long as your drill press table.

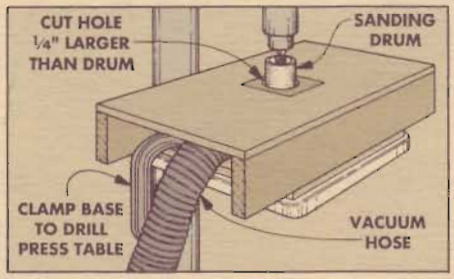

After the frame pieces are cut to size, cut a hole in one of the cross members to accept the hose from your shop vacuum. It should be a friction fit.

Now rip a piece of ¾" plywood to width to equal the depth (front to back) of the drill press table. This piece is cut into two lengths for the top and bottom of the box. The bottom is the same length as the width of the drill press table, and the top is cut to the length of the front and back frame pieces.

Before assembling the box, I cut a square hole right in the center of the top to accept sanding drum inserts. Then, to keep the inserts from dropping through the hole, I added cleats under the hole at the sides.

Now assemble the box. First, center the plywood bottom under the front and back frame pieces. Then, to provide a lip so the box can be clamped to the drill press, glue the cross members in about 2" from each end of the plywood bottom. Finally, glue the top down to the frame.

I also cut a set of inserts to fit the various drums I have. The inserts are cut from ¾"-thick plywood to fit the square hole in the top of the box. Then drill holes in the center of the inserts ¼" larger than the sanding drums. This will leave extra area for the dust to be pulled through and allows space so the drum doesn't have to be perfectly centered in the hole.

To use the box, clamp it to your drill press and lower the sanding drum so it's just inside the hole. Then lock down the quill and you're ready to sand.

Anthony Borsilli
Staten Island, New York

SEND IN YOUR TIPS

If you'd like to share a tip with others, send in your idea to Woodsmith, Tips & Techniques, 2200 Grand Ave., Des Moines, Iowa 50312.

We pay $15 for accepted tips. Please send an explanation and a sketch if needed (we'll draw a new one).

Rocking Horse

Remember when you were a kid and couldn't resist the pure delight of rocking at full speed? This is a project that creates those great memories.

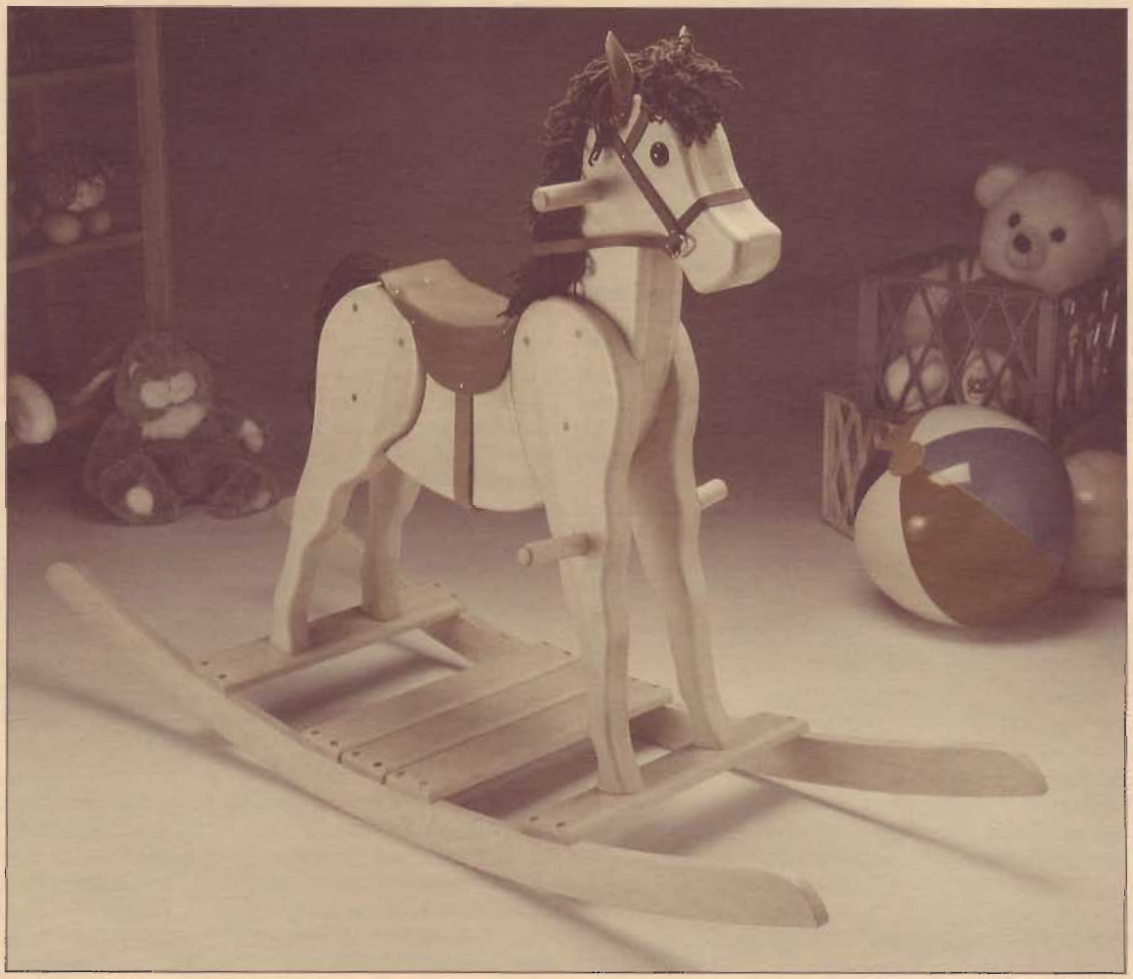

I am always amazed at the interest and opinions *adults* have concerning children's toys. I've wanted to make a rocking horse for a long time, but trying to come up with a rocking horse that all the adults liked was almost impossible.

MATERIAL. I knew from the start, that a rocking horse shouldn't look thin or spindly, so I made the body and the legs of the horse out of 1½"-thick stock. The thick material gives the horse a natural appearance and makes the back wide enough to sit on comfortably. I used ponderosa pine for the horse shown above, but any pine construction lumber will work.

Normally much of the challenge in woodworking can be traced to the importance of making accurate measurements and identical cuts, but the challenges of this project are different. As I was working on the horse, I realized that I didn't have to be so concerned about exact *measurements* — rather exact *fits*.

It's not so important that parts match our measurements exactly. It's more important they fit together well.

After I had built the horse's body, I wanted it to look even more realistic so I added a few extras — two glass eyes, ears, mane, and a tail. All the extras looked so good, I couldn't resist adding a leather saddle and bridle. (We liked these extra parts so much we decided to offer them as a kit, see page 24.)

EXPLODED VIEW

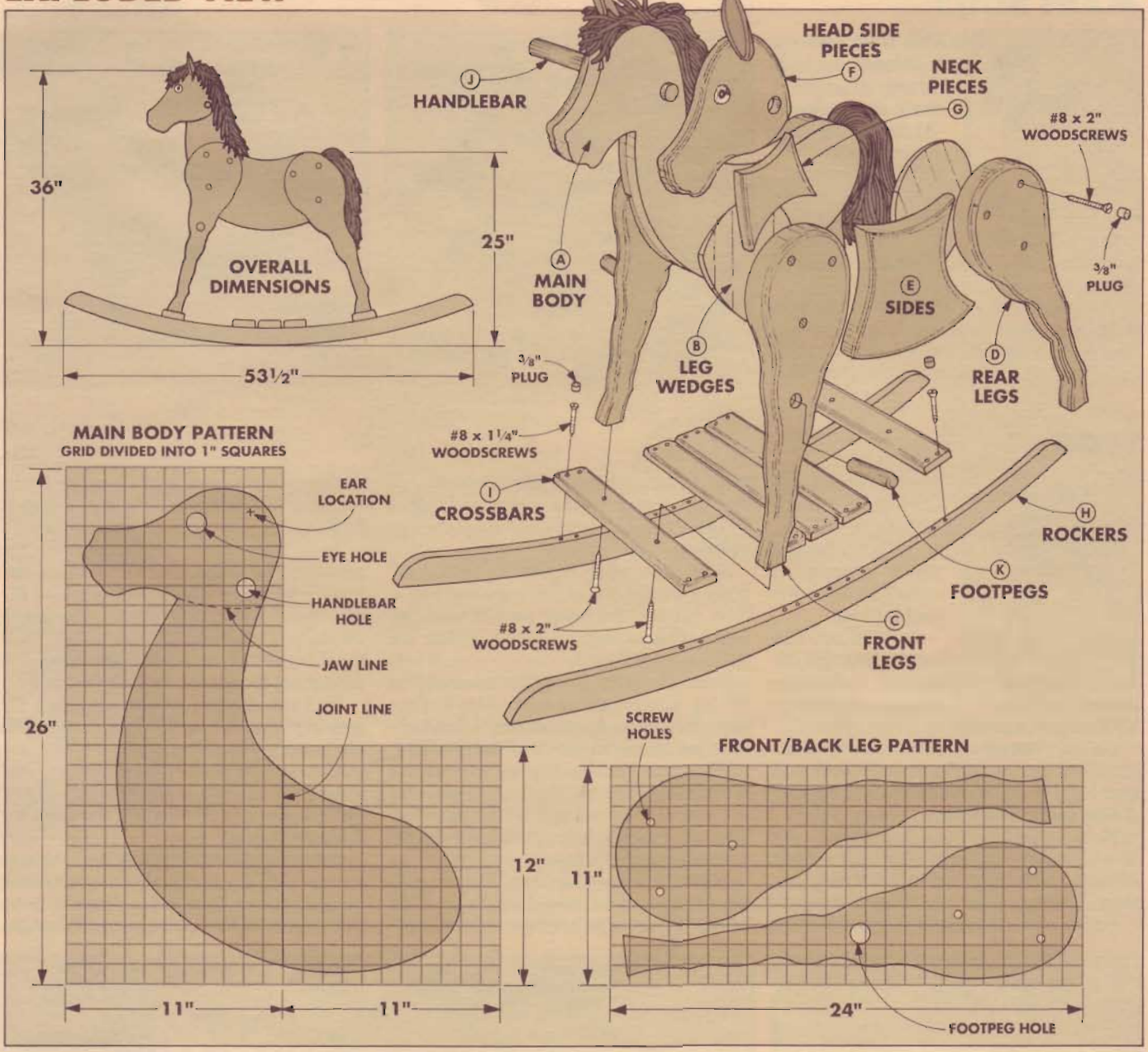

MATERIALS

WOOD PARTS

A	Main Body (1)	1½ x 11¼ - 38
B	Leg Wedges (4)	⅞ x 7½ - 10
C	Front Legs (2)	See below*
D	Rear Legs (2)	See below*
E	Sides (2)	1½ x 11¼ - 14
F	Head Side Pcs. (2)	¾ x 7¼ - 11
G	Neck Pieces (2)	¾ x 7¼ - 7
H	Rockers (2)	¾ x 2½ - 53½
I	Crossbars (5)	¾ x 3 - 17
J	Handlebar (1)	1"-dia. - 10"
K	Footpegs (2)	1"-dia. - 4¾"

* Cut a front and rear leg from a 24"-long blank of 2 x 12.

SUPPLIES

- (2) 2 x 12's, 72"-long
- (2) 1 x 8's, 72"-long
- (1) 1 x 8, 36"-long
- 20" piece of 1" dowel
- (32) ⅜" woodscrew hole plugs
- #8 x 1¼", #8 x 2" woodscrews
- small fencing staples*
- (1) skein 4-ply brown yarn*
- (2) 2" x 4" pieces of leather (ears)*
- (2) 1" glass eyes*
- Satin polyurethane, 1 pint

* These items are included in the hardware kit, see page 24.

CUTTING DIAGRAM

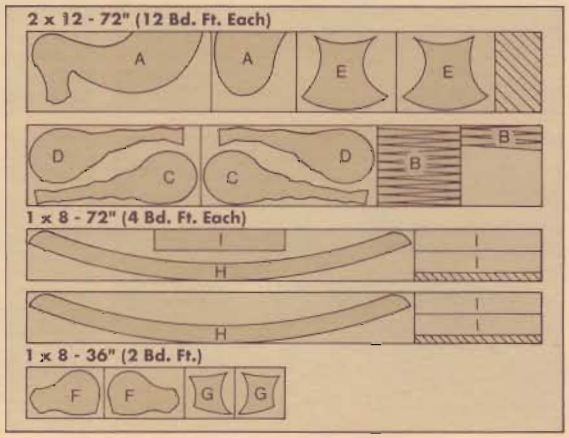

MAIN BODY

The first step in building the horse is to make an L-shaped blank for the **body (A)** from a 38"-long piece of 2 x 12 (1½" x 11¼" actual size).

To do this, square up one edge of the 2 x 12 to a final width of 11". Then cut a 12"-long piece off one end, and glue it to the other piece to form an L-shape, see Fig. 1.

Transfer the body shape from the grid drawing on page 5, or send for the pattern, see page 24. (For more on grid drawings, see page 13.) Then cut out the body and sand the edges.

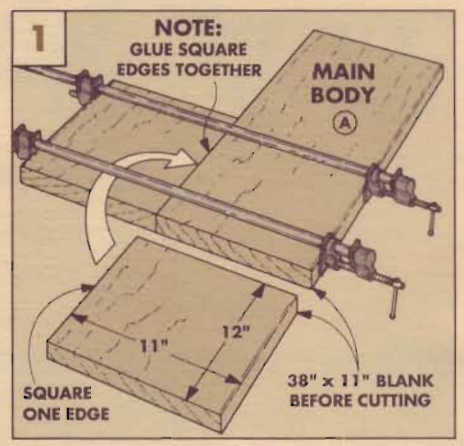

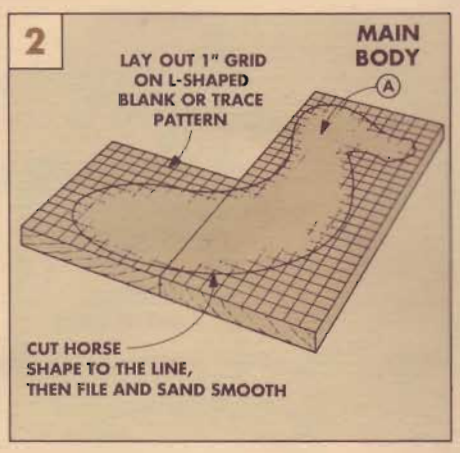

LEGS

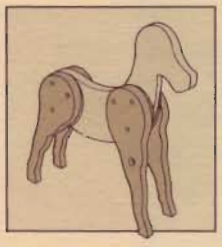

After the body (A) is sanded, I began working on the legs. To give the horse a natural stance, I added wedges behind each leg.

LEG WEDGES. The **leg wedges (B)** are formed by gluing five smaller wedges together, see Fig. 3. (For more on cutting wedges, see page 13.)

LAY OUT THE LEGS. After the wedges (B) are glued up, lay out the **front leg (C)** and **rear leg (D)** on a piece of 1½" stock, see Fig. 4. Also mark the screw and footpeg holes.

Now roughly cut apart the two legs, see Fig. 4. Then drill a footpeg hole in the front leg with a 1" forstner bit. Also drill holes for the mounting screws in both legs, see Fig. 5.

CUT IN TWO STEPS. The wedges (B) have to be cut to final shape while attached to the leg. But, because this creates a rather awkward cutting angle, I had to cut the legs and wedges in two steps.

First, draw a line across the pattern 10" down from the top of the legs, see Fig. 6. Now cut out the lower part of each leg (without the wedge attached), exiting the board at the 10" mark.

Next, attach the wedges to the *inside* of the leg with carpet tape, see Fig. 7. Then place the wedge-side down on the band saw table, and cut the remaining shape, see Fig. 8.

When one front leg (C) and one rear leg (D) have been cut out and sanded, use them as patterns to lay out and cut the other two legs. (Be sure the holes on this second set mirror those on the first.)

POSITION THE LEGS. Next, you can position the legs on the body (A). The problem here is to determine a reference point to get the legs at the correct angle (stance). I used the joint line (from making the L-shaped body, refer to Fig. 2) as a reference line.

To do this, place a straightedge on the joint line so it extends 18" beyond the horse's belly, see Fig. 9. Now position the rear leg (D) so the top of the leg is flush with the horse's back and the hoof is 1¾" from the straightedge, see Fig. 9. Then screw (but don't glue) the leg and wedge to the body.

With the rear leg in place, position the front leg (C) so the top of the leg is flush with the horse's back. Now adjust the front leg until there's 22½" between the hooves and 6" between the top of the legs, see Fig. 9. Then screw (but don't glue) the front leg down to the main body.

TRIMMING THE WEDGES. When both legs are mounted to one side, there's a section of wedge under the horse that needs to be trimmed. Turn the horse over and trace the

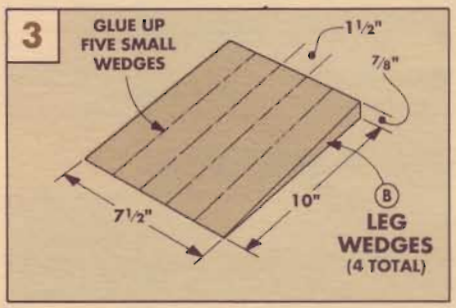

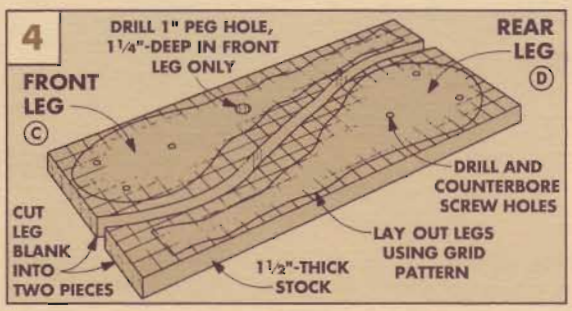

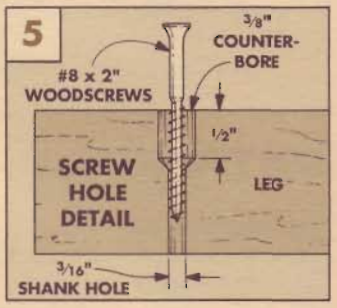

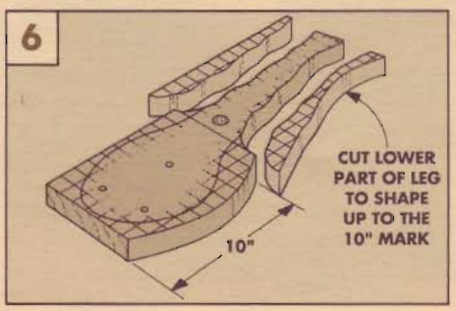

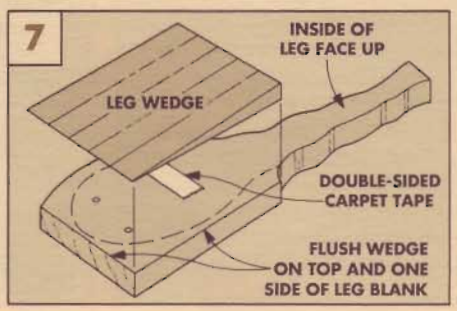

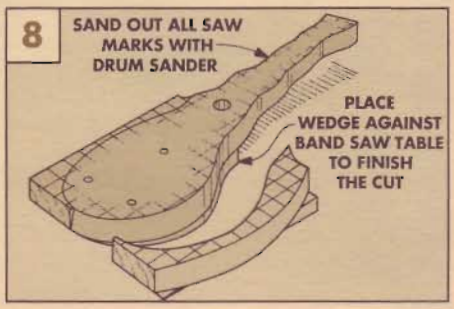

LEGS CONTINUED

horse's belly onto each wedge, see Fig. 10. Now unscrew the legs, pull off the wedges, and cut to the line.

ROUND OVER LEGS. To complete the legs, I routed a ½" round-over on the *outside* edge all the way around. (Note: Don't rout the bottom of the hoof.) However, the rounding on the *inside* edge stops at the wedge. To do this, place the wedge in position on the leg and mark where it meets the edges of the leg, see Fig. 10. Then remove the wedge and rout up to these marks.

Repeat the same procedure for the legs on the other side. Then screw all four legs to the horse's body.

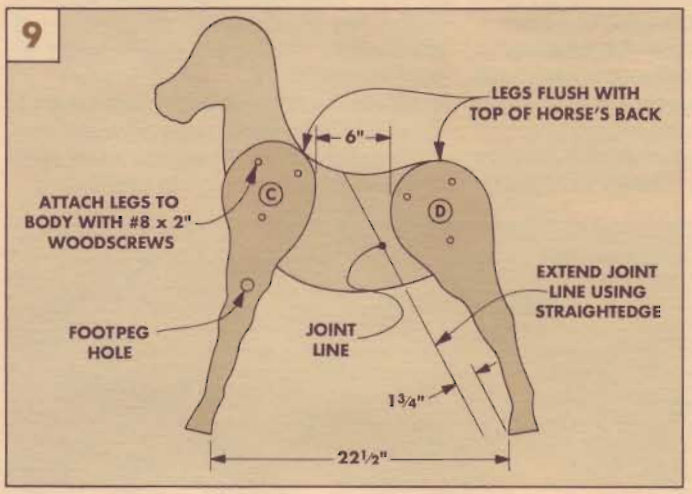

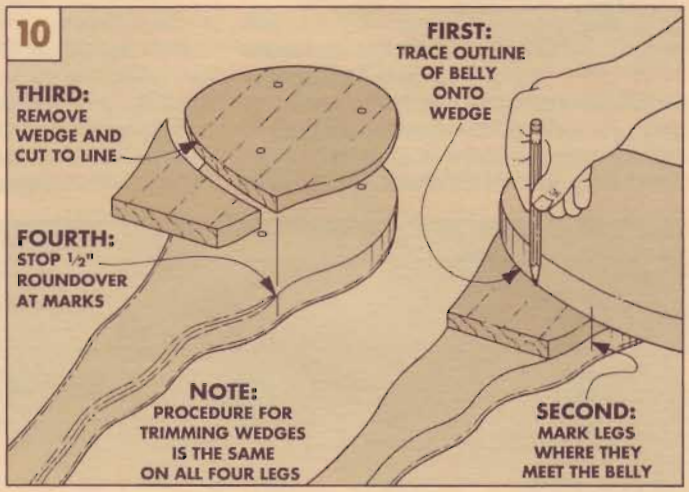

SIDES, HEAD, AND NECK

I didn't want a skinny horse, so I added the two **sides (E)**.

MAKE A PATTERN. To determine the shape of the sides, I made a paper pattern. Begin by unscrewing the legs on one side of the horse just enough to slip a piece of paper under them, see Fig. 11. Now trace the outline of the back, belly, and both legs onto the paper. Cut out this shape and glue it to a piece of 1½"-thick stock, see Fig. 12. (Since the shape may vary, make a separate pattern for each side.)

SAND TO FIT. To get a good fit, I cut the sides oversize, and then sanded to the lines. Once the sides fit, rout a ½" round-over on all four outside edges, and glue the sides to the body, see Fig 13.

TRACE THE HEAD. The next step is to cut the **head's side pieces (F)**. Start by tracing each side of the main head onto a piece of 1 x 8 stock, and draw the jaw line, see Fig. 14. Now, cut out and sand these two pieces so they're flush with the main head, and then clamp (but don't glue) them in place.

NECK. Next comes the neck. For the neck, follow the same procedure as when making the sides (E), see Fig. 15. Once the **neck (G)** pieces fit, glue the head pieces and neck pieces to the main body.

ROUT HEAD AND NECK. When the glue is dry, remove the front legs and rout a ½" round-over on the outside edges of the head and neck, see Fig. 16. (Note: Don't rout the neck where it meets the legs.) Finally, glue and screw the legs in place.

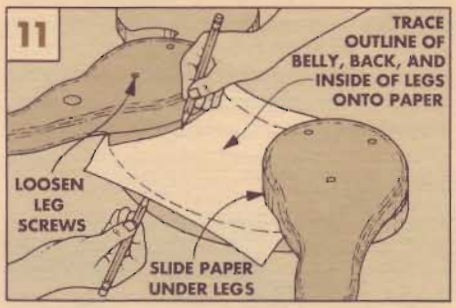

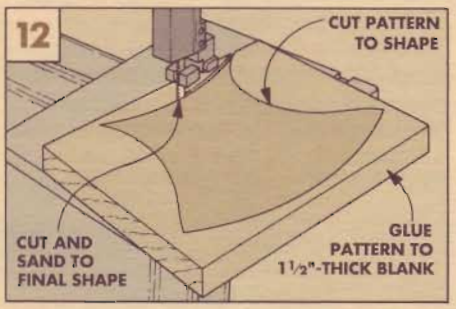

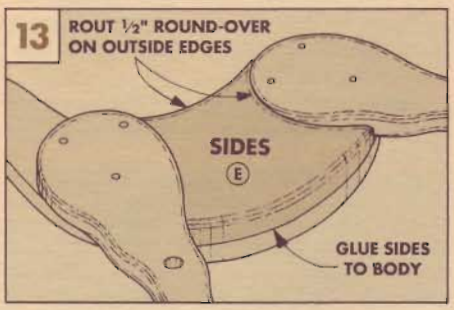

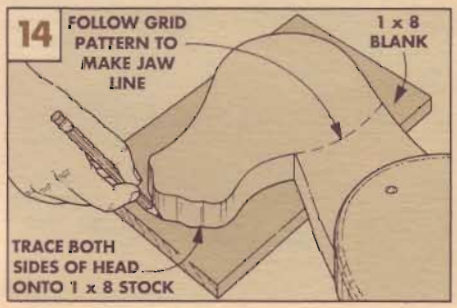

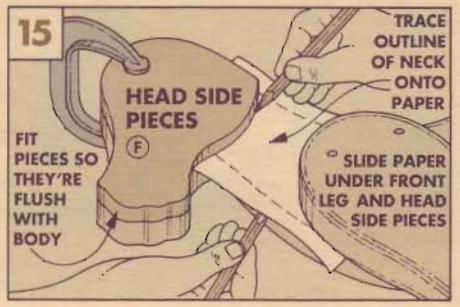

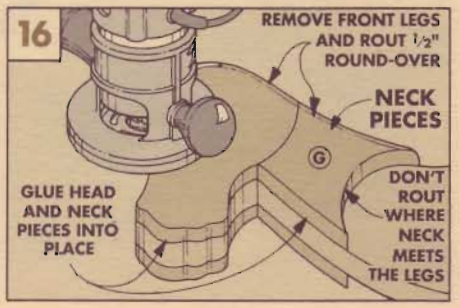

ROCKERS AND CROSSBARS

After the basic horse is completed, work can begin on the **rockers (H)**. Since the curve of the rockers follows a large radius, I made a six-foot beam compass to lay them out.

MAKE A COMPASS. To make the beam compass, start with a 78"-long strip of wood and nail down one end, see Fig. 17. Now measure down from the nail 69½" and 72", and drill two holes, the size of a pencil.

DRAW THE CURVE. Next, place a 54"-long piece of 1 x 8 stock under the beam and insert a pencil through the holes to draw the curves of the rockers (H), see Fig. 17.

To complete the layout, draw a 2½" radius at the end of each rocker, see Fig. 17a.

MAKING THE CROSSBARS. After cutting out the rockers, next I cut five **crossbars (I)**, see Fig. 18. Round over both the top edges and ends with a ½" round-over bit.

To attach the crossbars to the rockers, counterbore mounting holes for No. 8 x 1¼" woodscrews, see Fig. 18.

MOUNT THE CROSSBARS. To position the front and rear crossbars (I) on the rockers (H), mark the centerpoint of each rocker. Then measure the distance between the center of the front and rear hooves on the horse. Now screw two crossbars (I) into the rockers so they will be directly beneath the hooves, see Fig. 19.

Attach the remaining three crossbars so they're ¼" apart and centered on the rockers, see Fig. 19. Then plug the screw holes and sand them flush.

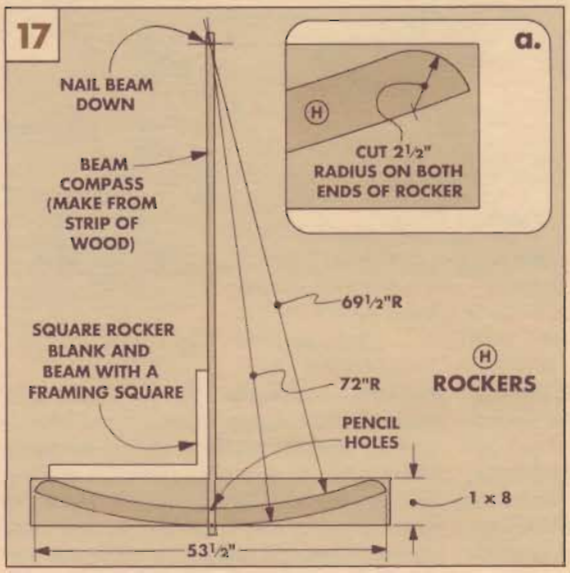

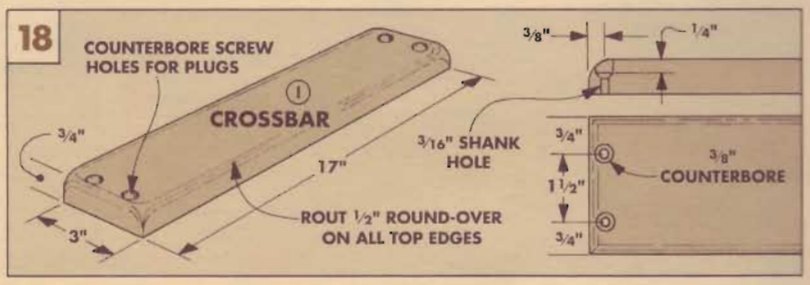

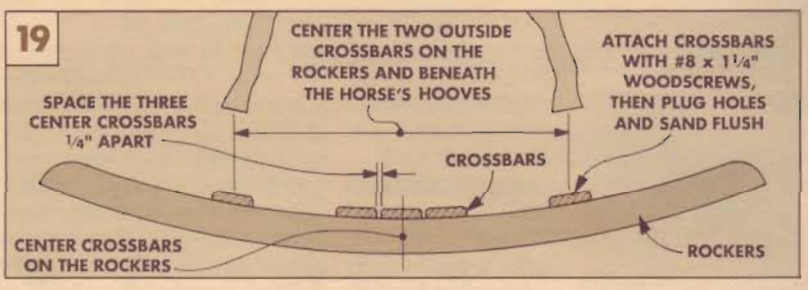

ATTACHING LEGS TO CROSSBARS

Now that all five crossbars (I) are screwed in place, the horse's hooves have to be cut so they'll sit flat on the two outside crossbars.

Begin by centering the horse's hooves, front to back and side to side, on the outside crossbars, see Fig. 20.

SCRIBE THE CUT LINE. Once the horse is in position, scribe a cut line around each of the four hooves.

Note: If the horse sits unevenly or tilts to one side, place a small shim under one or more of the hooves until it sits correctly. In order to scribe each hoof, the shim must not stick out from under the hoof.

To scribe the hooves, first determine which of the hooves has the greatest amount of space beneath it. Then, using the scribing block technique described on page 12, mark a line around each of the hooves, see Fig. 21. (This is where each of the hooves will be cut.) Now use a fine tooth hand saw to trim each hoof along the scribed line.

SCREW DOWN HORSE. When the hooves have been cut and they sit flat, the horse can be attached to the two outside crossbars. To do this, mark the center of each hoof on the bottom of the crossbars. Then drill and countersink a 3/16" shank hole. Using one No. 8 x 2" woodscrew per hoof, screw the horse into place, see Fig. 22.

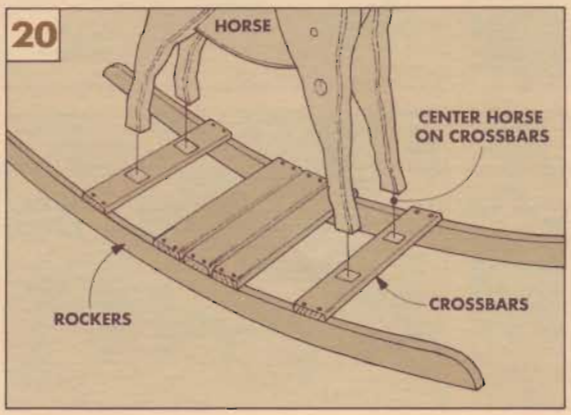

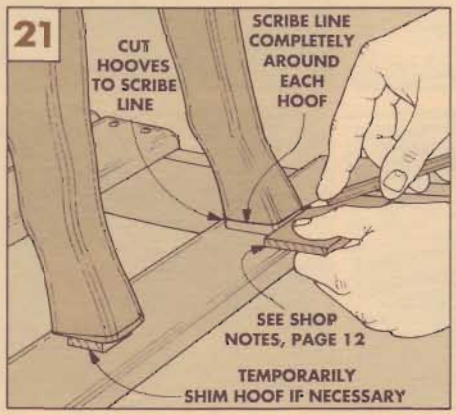

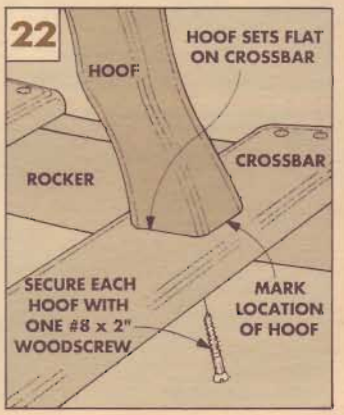

HANDLEBAR AND FOOTPEGS

Once the horse is screwed down to the crossbars, I added the **handlebar (J)** and the **footpegs (K)** to keep little hands and feet in place.

HANDLEBAR HOLE. To locate the position of the hole for the handlebar (J) refer to the grid drawing on page 5. To prevent the wood from splintering, drill through one side of the head until the *point* of the spade bit breaks through the other side. Then, back the bit out and drill from the other side

Note: I used a Portalign on a hand-held drill, see Fig. 23.

HANDLEBAR. With the hole drilled, the handlebar (J) is cut 10" long from a piece of 1"-dowel. Before the handlebar can be glued into place it has to be centered in the head and then marked so that equal amounts stick out either side, see Fig. 24.

Note: To glue the handlebar in place I used the tip described on page 3.

Since I didn't want the handlebar to move after it was glued, I also pinned it in place with two 4d finish nails through the horse's neck and into the handlebar, see Fig. 24.

FOOTPEGS. To make the footpegs (K), cut two 4¾"-long pieces of 1" dowel. Then glue the two pegs into the holes drilled in the front legs (C). Also use 4d finish nails to pin the pegs in place, see Fig. 25.

All that's left to complete work on the handlebar (J) and the footpegs (K), is to sand the ends of the dowels to a soft radius and fill the nail holes with wood putty.

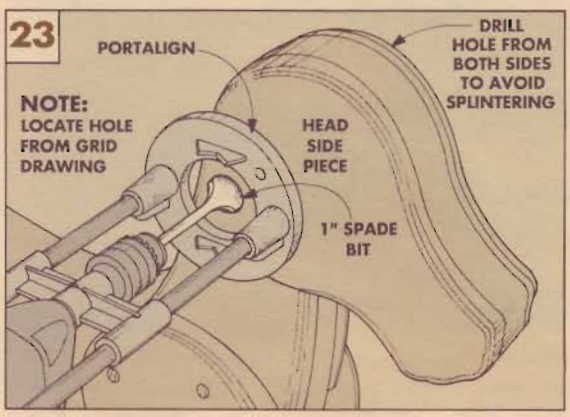

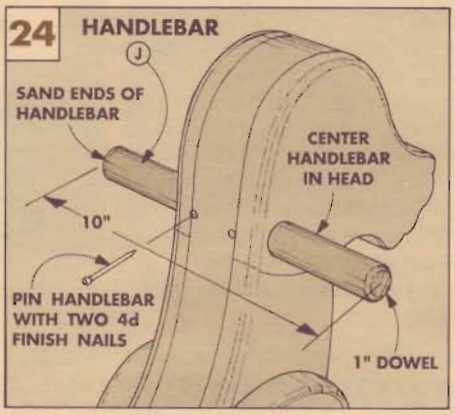

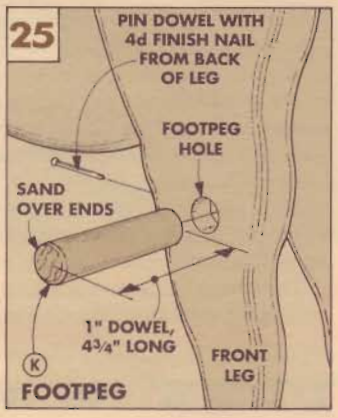

EYES, EARS, MANE, AND TAIL

The wooden parts of the horse are complete at this point. Since this horse is bound to take some abuse, I wanted the finish to be as durable as possible. I used two coats of satin polyurethane, sanding lightly between coats.

EYES. The finishing touches are the eyes, ears, mane, and tail. The eyes I used are called glass craft eyes that are 1" in diameter. Using the grid drawing as a reference, I drilled a 1" hole, ⅛"-deep on either side of the head. Then I simply glued the eyes in place with epoxy, see Fig. 26.

EARS. The ears are cut from two small pieces of ⅛"-thick leather. To make the ears, cut the leather into football-shaped pieces that are 2"-wide and 4"-long. Then fold the two pieces in half lengthwise and nail them to either side of the head, see Fig. 26.

THE MANE. What's a horse without a flowing mane? To make the mane, cut 4-ply yarn into 12" lengths. There are over 200 strands of yarn in the mane, so make sure to make enough. Then using a small fencing staple, attach the yarn in clumps of 15 pieces. Start 1" above the base of the neck and center the staple over the midpoint of the pieces of yarn, see Fig. 27. Note: To prevent a bald spot at the top of the head, I stapled in extra clumps of yarn.

THE TAIL. The final step is to add the tail. The tail is made the same way as the mane except the yarn pieces are 28"-long and there are 34 pieces in each of the three clumps, see Fig. 28.

If you want to make the saddle and bridle shown in the photo, see Sources on page 24.

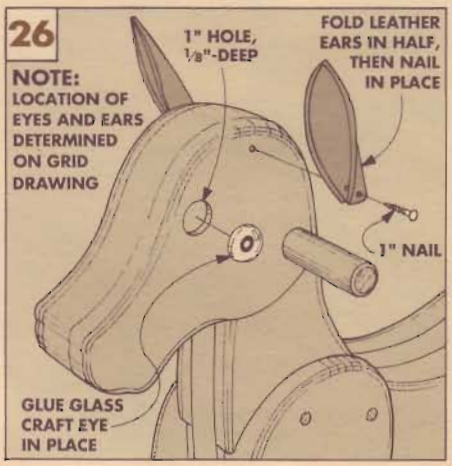

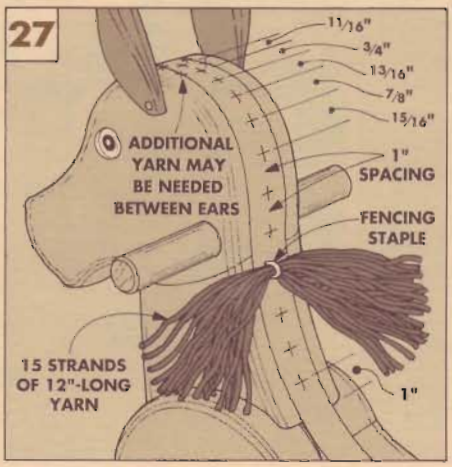

Stamp Dispenser

When I started working on this stamp dispenser, I thought it would be a relatively simple project — something I could knock out in one evening with no problem.

But I discovered there was one especially challenging aspect. The stamp dispenser is basically two pieces — an outside case and a stamp holder that slides inside it, refer to Fig. 8. The challenge is fitting the holder into the case — perfectly. A little loose and it slides right out. A little tight and you can't pull it out to add a roll of stamps. It has to be nearly a perfect friction fit.

There are two secrets to getting this kind of fit. First, the case is designed so the stamp holder is cut directly out of the center section of the outside case. But even with this design it still takes a little patient sanding. Don't try to speed along too fast. Use a gentle hand and a few trial fits to sand the holder down to the right fit in the case.

Before you start, there's a decision to be made about the type of wood to use. Building a case this small presents an ideal opportunity to use up some of the scraps around the shop. It's also a way to experiment with exotic woods, without spending a fortune.

The stamp holder will accept a roll of one hundred stamps (which costs a lot more than when I was a kid).

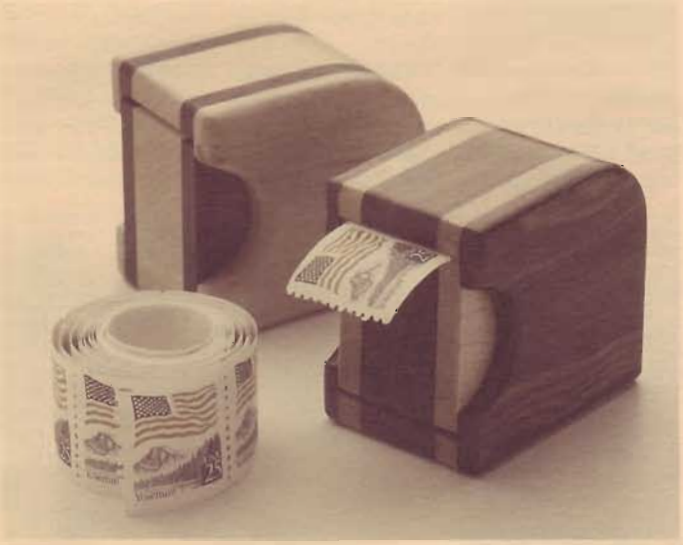

LAMINATING THE CENTER BLANK

The center section of the case and the pull-out stamp holder are made from one blank. This blank has to be 1⅛" thick to accomodate a roll of stamps. It can be one solid block or laminated from three pieces, see Fig. 1.

CENTER BLANK. To make a laminated blank, rip a ¾"-thick **center piece (A)** 2⅛" wide and at least 3" long. (This is ⅛" wider than the final blank to allow for trimming. Also, for easier handling, I recommend cutting this piece 8" long. This will yield two dispensers out of one blank.)

Next, resaw two **side pieces (B)** 3/16"-thick. (This thickness will produce a block 1⅛"-thick — ⅛" more than the height of a 100-count roll of postage stamps.)

LAMINATE. After the pieces are cut, glue and clamp the thin side pieces (B) to both faces of the center piece (A), see Fig. 1a. Make sure there's uniform clamping pressure over the blank.

CUT TO SIZE. When the glue is dry, trim the blank down to 2" wide and cut off a 3" length.

Shop Note: Before going on, I labelled the front, back, top, and bottom to keep track of all the edges, see Fig. 1.

DRILL HOLE. A 1¼"-dia. hole is just the right size to hold a roll of 100 stamps. Lay out a centerpoint for this hole on the side of the blank ⅞" down from the top edge and ⅞" in from the back edge, see Fig. 1.

Then drill out the hole on the drill press, see Fig. 2. To keep from chipping out the back side, flip the piece over when the point of the bit breaks through and complete by drilling from the back side.

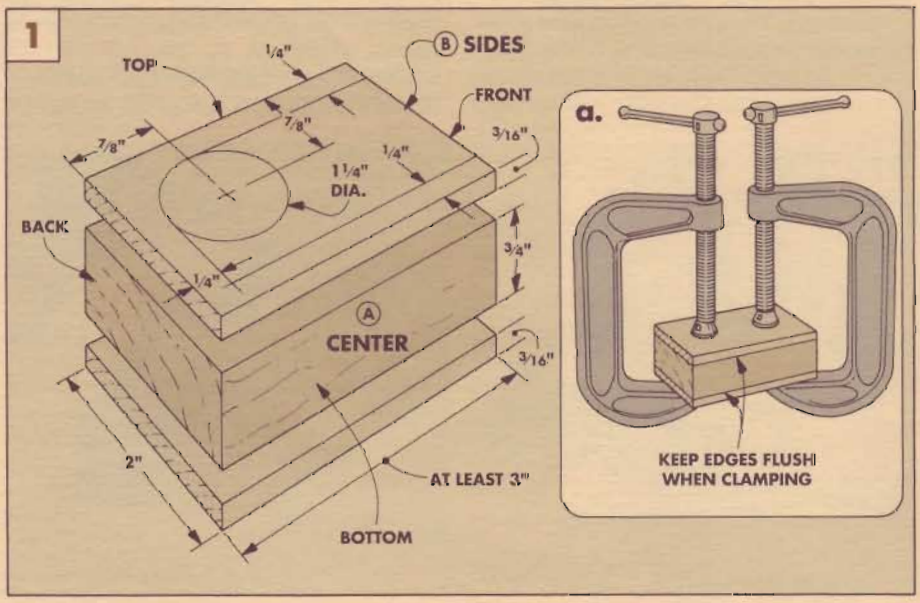

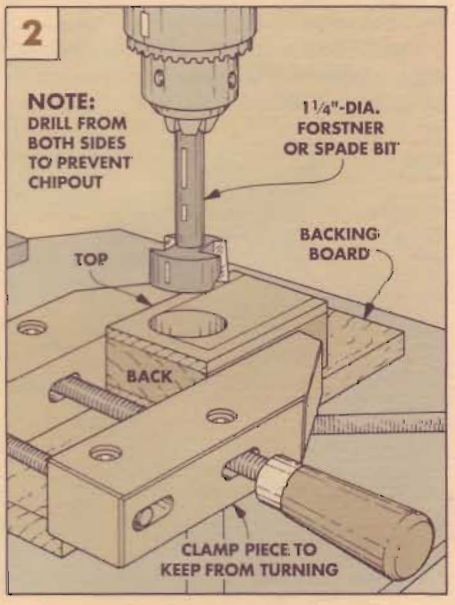

CUTTING OUT THE STAMP HOLDER

After drilling the hole for the roll of stamps, I used the band saw to cut the stamp holder out of the center of the block.

SET UP FENCE. Start by clamping the rip fence (or a straight piece of plywood) to the top of the band saw table ¼" from the *inside* of the blade, see Fig. 3a.

FIRST CUT. There are actually three separate cuts that produce a "U" shape. To make the first cut, set the *top edge* of the laminated blank against the fence and start the cut on the *front edge*, cutting until the blade just breaks into the hole, see Fig. 3.

SECOND CUT. Before making the second and third cuts, mark stop lines ¼" from the *back edge* on both sides, see Fig. 1. Then place the piece so the *bottom edge* is against the fence and make the second cut until the blade touches the stop line.

THIRD CUT. To complete the "U," first turn off the power and remove the fence. Then feed the blade back through the first cut until it's in the hole and next to the pencil line. Turn on the power and cut along the pencil line down to the second cut, and remove the holder, see Fig. 4. Once they're cut apart, save both of the pieces.

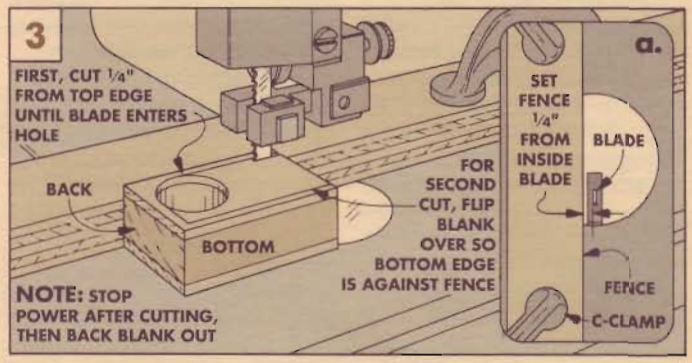

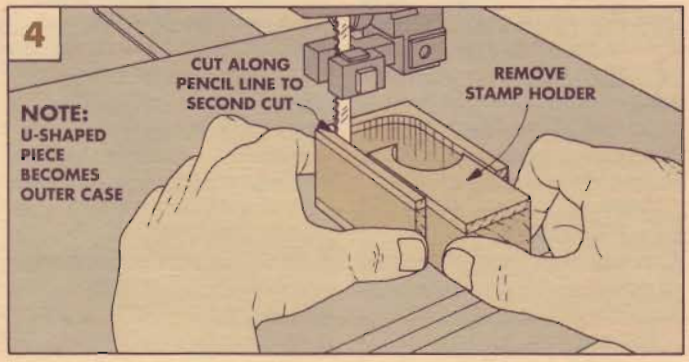

FINISHING THE DISPENSER

After the two pieces are cut apart, the case is completed by gluing 3/16"-thick **case sides (C)** to the outside of the "U"-shaped case.

CUT TO SIZE. Start by cutting the sides to the same width (2") and length (3") as the case. (For these parts, I used the same wood as the center piece on the case.)

DRILL HOLE. To provide a finger recess for pulling out the stamp holder, I drilled a 1"-dia. hole through both side pieces (C), see Fig. 5. (Later these holes will be cut in half, refer to Fig. 6.)

GLUE ON SIDES. Now you can glue and clamp the sides to the case with the holes toward the open end of the "U," see Fig. 5.

Here's the first point where you have to be careful or the stamp holder won't have a perfect fit in the case. First, apply the glue *sparingly*. Any glue squeeze-out inside the case will prevent the holder from fitting. And don't put too much pressure on the clamps.

REINSERT HOLDER. Once the glue dries, remove the clamps and push the stamp holder back into the case. It will probably be a very tight fit. If it doesn't fit all the way against the back of the case, check for any dried glue that might be in the way. If it still doesn't fit, you may have to *slightly* sand the side of the stamp holder, see Fig. 7. Don't sand too much — you want a very tight fit at this point.

CUT OFF END. After the holder fits into the case, sand the top and bottom bandsawn edges smooth. Then slide the holder *all the way* in the case, and push it down so there's a slot for stamps at the top. Now cut off the front of the assembled pieces, see Fig. 6.

CORNER RADIUS. Next, cut a 7/8"-radius off the top back corner of the case and sand this corner smooth, see Fig. 6.

FRICTION FIT. Now comes the tricky part. What you want is a friction fit between the holder and outside case. To get this, I pulled out the holder and sanded the sides *slightly*.

The best way to do this is to rub the stamp holder across a piece of sandpaper that's laying on a flat surface, see Fig. 7. Keep checking until the holder fits loose enough to pull out easily, but not so loose it falls out.

ROUND EDGES. Finally, round over the edges of the case, see Fig. 8.

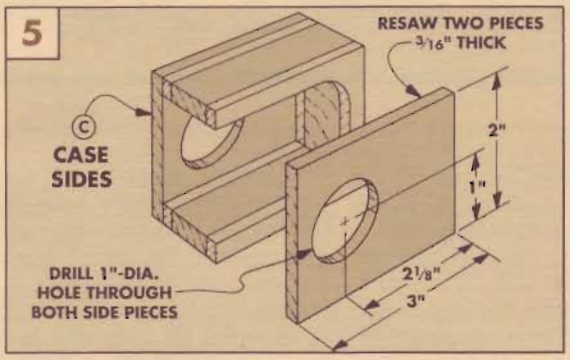

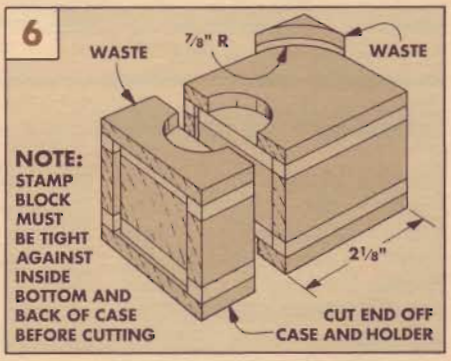

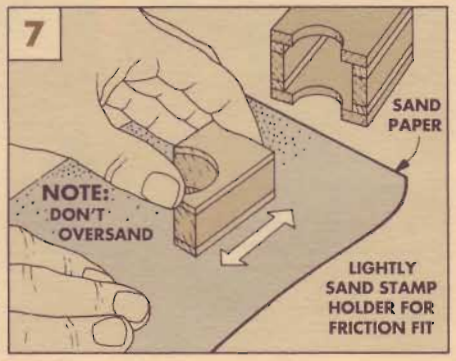

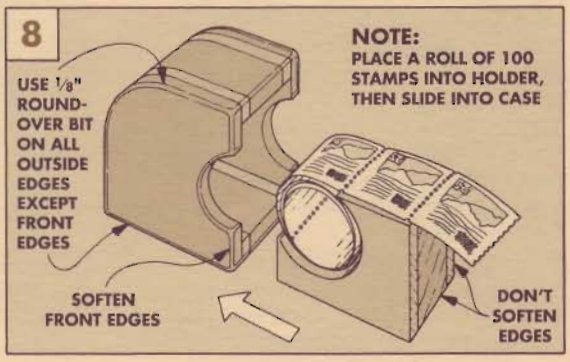

Shop Notes

SCRIBING

When I built the template for the Oval Box on page 20, I had to *scribe* a line around the oval mirror. When you scribe a line, all you're really doing is tracing around an object. The trick is to always keep the tracing an *equal* distance from the object.

COMPASS. The traditional tool for scribing a line is a compass. A compass can be set so the pencil point and the pivot point stay a specific distance apart.

The compass that I like to use for scribing has a threaded rod that passes through the center of the legs. This adjusting rod allows the compass to be set easily. The other benefit to using this type of compass is the legs won't move as you're scribing.

SCRIBING A CABINET. A typical example of scribing with a compass would be when fitting a cabinet to an uneven wall, see Fig. 1. To do this, set the distance between the compass point and the pencil so the pencil leaves a mark on the cabinet as you pull the compass down the wall.

After scribing, cut the side of the cabinet on the line and it should nestle in against the wall.

A PROBLEM. While a compass works well, there can be a problem. This occurs when you're trying to scribe a small distance (as when making the template for the Oval Box). With the point and the pencil so close together, you can't mark with the tip of the pencil without pushing the pivot point away from the side of the object, see Fig. 2.

POSTERBOARD SCRIBE. To solve this problem, I scribed around the mirror with a piece of posterboard and a pencil.

Starting with a 1" x 1" square of posterboard, I punched a small hole at a desired distance (⅛" for the Oval Box) from one edge, see Fig. 3a. Then push the tip of a pencil in the hole until it just starts to come through the other side.

Now, hold the posterboard tight against the side of the mirror and move the pencil around the oval, see Fig. 3.

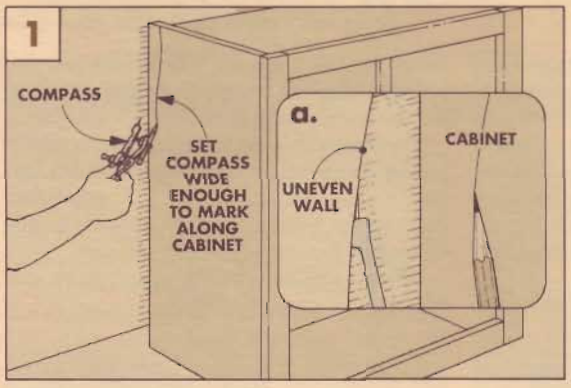

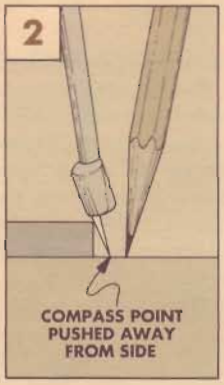

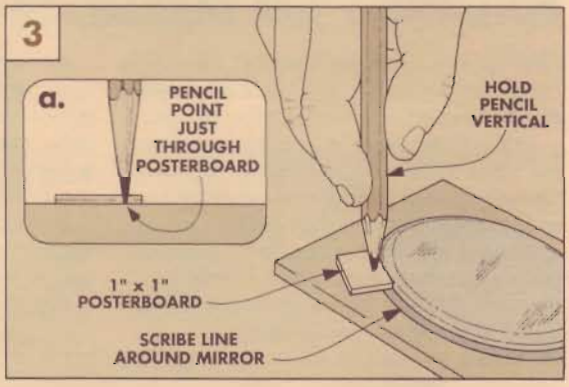

SCRIBING BLOCK

Scribing the hooves on the Rocking Horse was a problem that required a different solution. Since there's a space beneath the hooves, the point of a compass will slide under it and make an inaccurate scribe line.

To solve this problem, I applied the same technique I use when leveling legs on stools and chairs. The idea is to scribe a line on all four legs that's an equal distance from the floor. Then, when the legs are cut on the scribed lines, all the legs sit flat.

WORK ON FLAT SURFACE. Begin by setting the stool on a flat surface. The table saw is the flattest surface in my shop. (When scribing the Rocking Horse, set the horse on the rockers as explained on page 8.)

SHIM UP LEG. Now, add a shim under the short leg (or legs) until the stool sits level, see Fig. 1. (Note: If the shims stick out from under the legs, they'll interfere when you scribe.)

SCRIBING BLOCK. Next, measure the distance beneath the bottom of the shortest leg (the one with the largest shim) and cut a small block equal to that measurement, see Fig. 1a.

To scribe, place the side of a pencil point tight against the top of the block. Then move the pencil and block around each of the legs, see Fig.2.

All that's left to level the stool (or Horse) is to cut each leg on the scribed line.

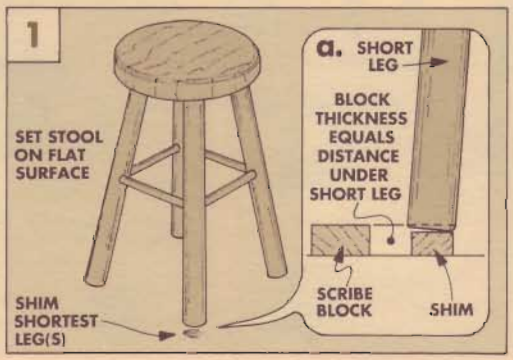

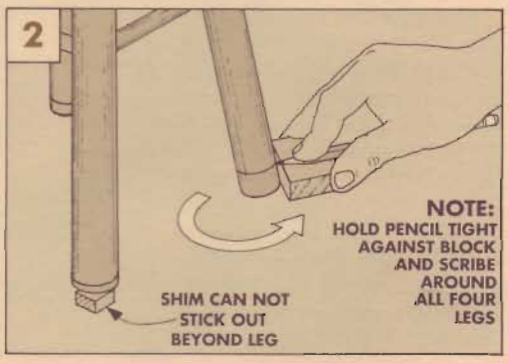

TRANSFERRING A PATTERN FROM A GRID

The problem with laying out a project like the Rocking Horse (page 4) is the lack of square edges. There's nothing to dimension from. That's why we use a grid to help with the layout.

There are a few tricks that can make using a grid easier. (If you don't want to use a grid, get the full-size plans for the Horse and trace them, see page 24.)

ACCURATE MEASUREMENTS. To make the grid, first mark points 1" apart around the outside edges of the board you're going to cut the horse out of.

Then connect the marks. If the grid is small, I use a framing square to lightly pencil in the lines. If the grid is large, I use a straight board or drywall square.

DRAWING THE SHAPE. Once the grid lines are drawn, the shape can be transferred to the grid. To keep from losing my place, I think of the grid as a series of horizontal "bands."

Within each band there are points where the outline intersects the grid. It's these points that are transferred from the pattern to the grid.

To locate these points, I mentally divide each 1" length of grid line into fourths. This way I can estimate the intersection points easier, see Fig. 1a.

After marking the points, it's a matter of connecting them with a curved line. To do this, look at the shape, then sketch the curve between the points, see Fig. 2.

The outline doesn't have to match the pattern exactly. It's more important that the finished shape looks and feels smooth.

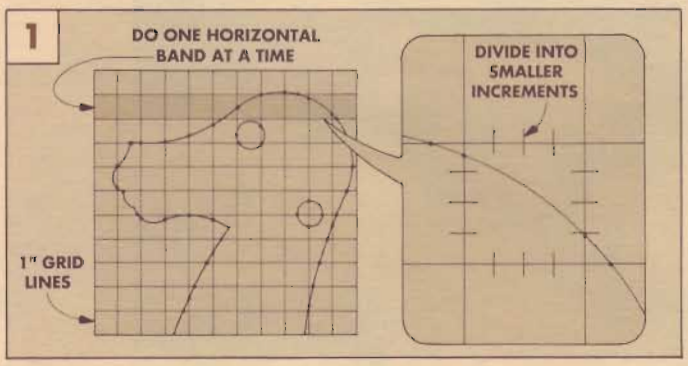

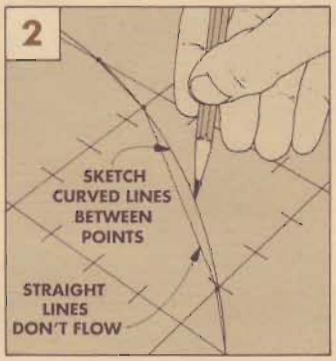

CUTTING WEDGES

The legs on the Rocking Horse are splayed out with wide wedges (see page 6). To make these wedges this wide, I started with narrow wedges and glued them together.

CUT THE BLANK. To make the narrow wedges, start with a blank the same length as you want the wedges to end up.

Since I needed a lot of wedges for the Rocking Horse, I glued together pieces of 1½"-thick stock to form a blank 10" long and 22" wide. (Note grain direction in Fig. 3.) The extra width allows you to support the piece with the miter gauge.

SET UP SAW. Setting up the saw to cut the wedges takes a number of steps. First, place a spacer block between the rip fence and the blade. Then lock down the fence so the distance from the block to the blade equals the *wide end* of the wedge (⅞" for the horse), see Fig. 1. Now move back the block and clamp it to the fence *in front* of the blade.

Then put a mark on one edge of the workpiece that's *half* of the wide end (7/16"), see Fig. 2.

Now, angle the workpiece so the mark aligns with the *inside* of the blade and the adjacent edge touches the block. Then adjust the miter gauge to fit tight against the workpiece, see Fig. 2.

CUTTING WEDGES. After the saw is set up, make a pass to establish the angle. The cut-off piece from this first cut is waste.

Then flip the blank over and make another pass, see Fig. 3. The cut-off from this pass is the correctly tapered wedge. To cut more wedges, continue flipping the piece between cuts.

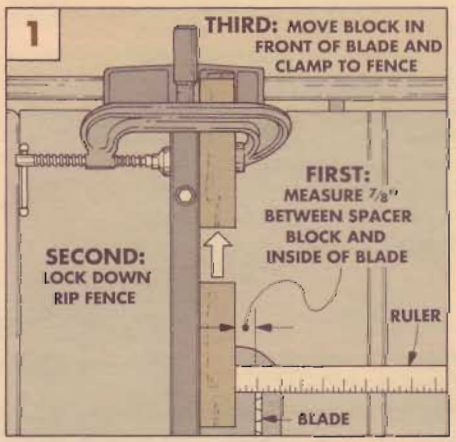

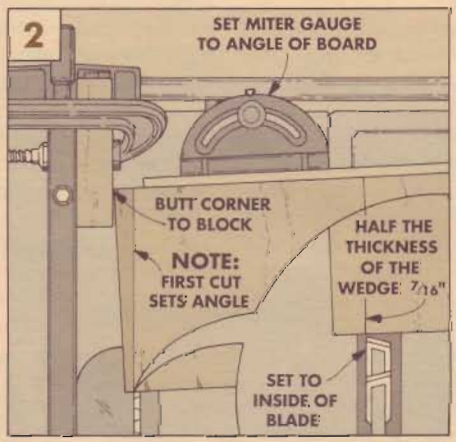

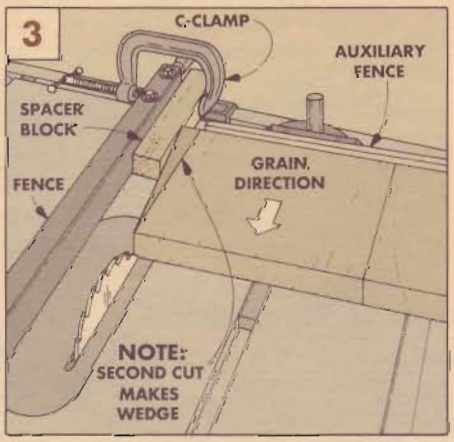

Toy Train

All the cars for this miniature railroad system start with the same basic chassis and a unique coupling system. Then you add top pieces to produce individual cars. And don't forget to lay some track under the train.

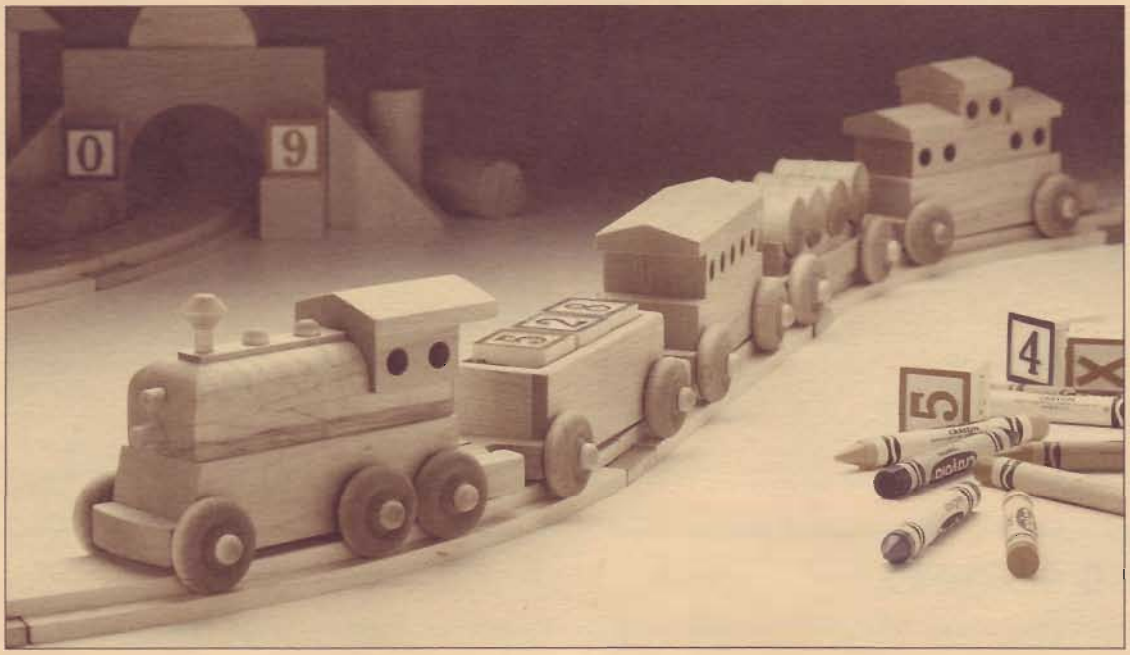

Designing a toy like this train can quickly get out of hand. The question you're usually faced with is who are you designing it for: a child to play with or an adult to build? From my experience, kids want toys that move around, but don't break. And they want toys that allow them to use their imagination.

Adults, on the other hand, want to build toys that look authentic (often to the finest detail). The problem is that extremely detailed toys are usually built to sit on a shelf. Kids would destroy them.

In designing this train, we tried to compromise. It has enough detail to be interesting and not look clunky. But at the same time, it's built rugged so even the youngest kid can play with it without breaking it.

UNIFORM CHASSIS. Building each of the five cars starts the same — you build the chassis. Then it's a matter of adding pieces so it looks like a specific car.

Since all of the chassis are built the same, and interconnect with a unique coupling system (refer to the opposite page), this system allows the cars to be arranged in any order to fit the needs of the engineer.

TRACK. After I finished building the train, I decided to make some track for the train to run on. The article on pages 18 to 19 shows how to build both straight and curved sections. I think this is where the fun begins. If you make enough track sections, kids can use their imaginations to build all kinds of different layouts.

MATERIALS. I built the train and track from hard maple. (If hard maple is difficult to find in your area, we're offering the wood and the other parts to build the train and track, see page 24.) But you could make the entire train out of pine or any other wood.

FINISH. The train and track will undoubtedly get banged up so it may be best to soften all the edges and to leave the wood unfinished. If you want to finish it, I would recommend an oil finish that flows into the tight spots. If the train is to be used by very small children, use a finish that's non-toxic, see page 24.

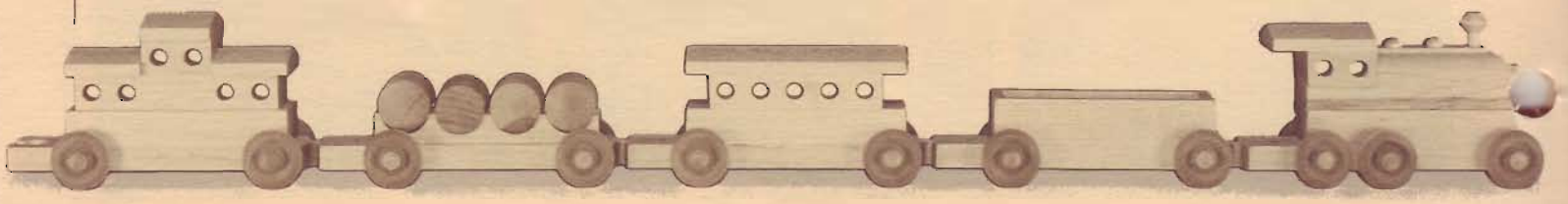

THE CHASSIS

All five cars start with the same basic **chassis (A)**, see below.

WHEELS. Cut the chassis to size, then drill the holes for the axle pegs as shown in Step 1. (After the car was complete, I mounted the wheels using the tip in the box at right.)

COUPLING. The most challenging part to make is the coupling. Each chassis has a hole near the back end (Steps 2 and 3) and a tongue on the front (Steps 4 to 6). Laying out and cutting the couplings on the first car takes a little time. But after cutting the first chassis, I used it as a template for laying out the rest.

SHOP TIP

When mounting the wheels to the chassis, I use a simple technique to keep from driving the axle pegs in too far.

Slip a cardboard spacer between the wheel and chassis and drive the peg in tight. After pulling out the spacer, the gap left allows the wheel to spin without binding.

Note: To keep the wheels from getting in the way while building the car, I mounted them *after* the other pieces were glued to the chassis.

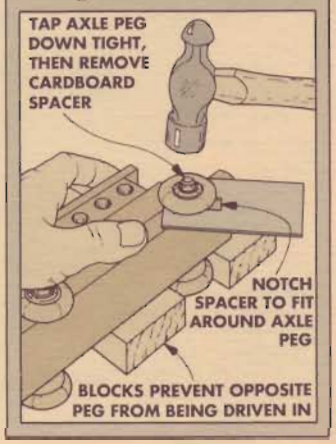

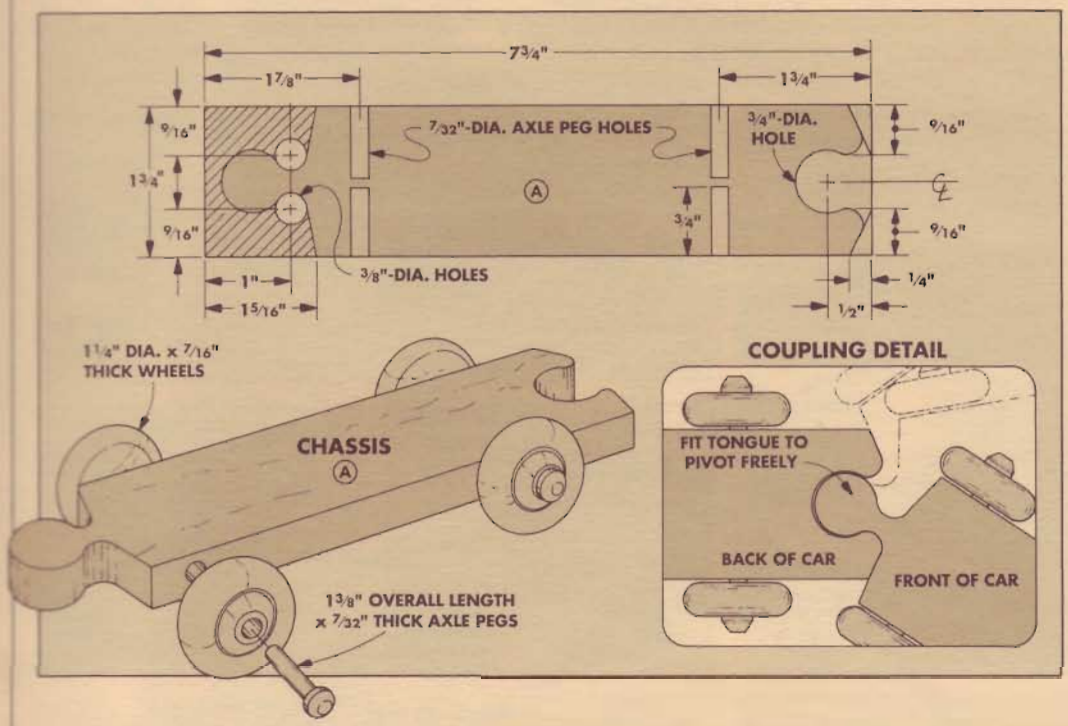

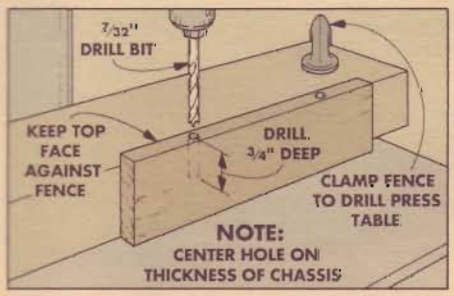

1 *After cutting the chassis to size, drill holes for axle pegs centered on the thickness. To make sure the car sits level, keep the top face against fence for all holes.*

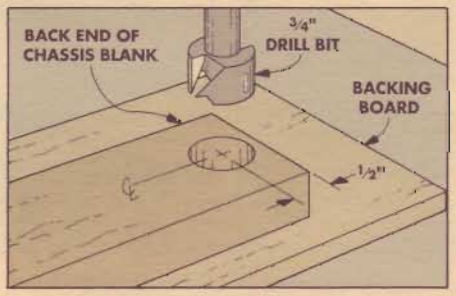

2 *Begin making the female part of the coupling by drilling a ¾"-dia. hole centered ½" from the back end. Center the hole on the width of the chassis blank.*

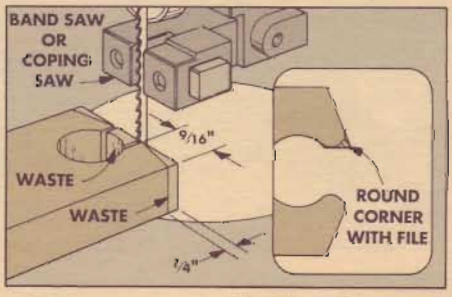

3 *Next, measure 9/16" from the corner and saw into hole. To allow coupling to pivot on curves, cut wedge-shaped sections off the end and round hole entrance.*

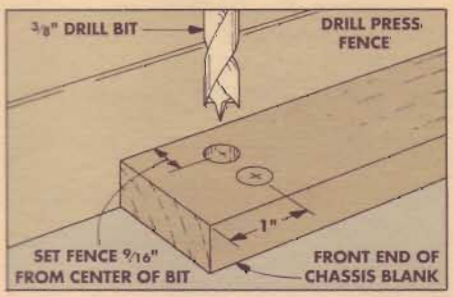

4 *To make the male section of the coupling, start by drilling two ⅜"-dia. holes 1" from the front end of the chassis blank. Center the holes 9/16" from each edge.*

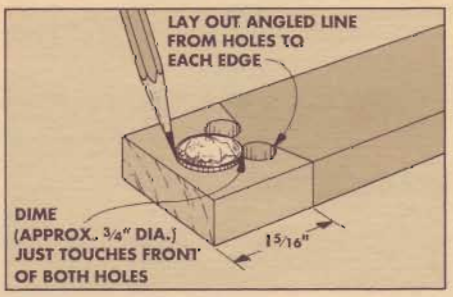

5 *Position a dime as a template so that it touches the front edge of the holes and draw around the dime. Then draw angled lines down from holes to the edges.*

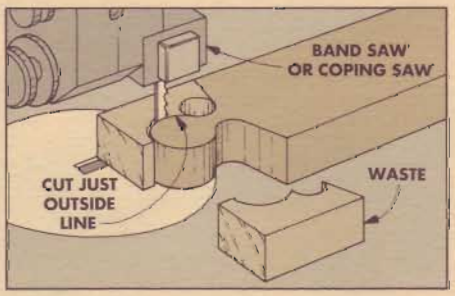

6 *To finish tongue, cut just outside line with a band saw or coping saw. Then file and sand up to the line checking that the coupling fits easily together and pivots.*

ENGINE

Since the engine pulls the rest of the train, I built it first. The chassis (A) for the engine requires a few modifications. First, cut the tongue off the front end, see Fig. 2. Then drill another set of holes for the tandem wheels.

LOWER BLOCK. Start adding top pieces by cutting a **lower block (B)** from ¾"-thick stock that's the same width as the chassis. Then trim an 18° bevel off the front end and glue the block to the chassis, see Fig. 3.

BOILER. Next, the boiler is built up from two 1½"-wide pieces. Cut the ½"-thick **center section (C)** to length so the front end aligns with the bevel on the lower block (B).

Then cut the ¾"-thick **top section (D)** 3" long, and round over the front end and sides, see Fig. 5. Now drill holes for the smokestack, filler caps, and headlights, see Figs. 1 and 5. Then glue down the boiler parts.

CAB. Next, make the **cab (E)** out of a small rectangle of ¾"-thick stock and drill holes for the windows, see Fig. 4.

ROOF. The **roof (F)** for the engine, the passenger car, and the caboose are all made the same, so I cut a blank long enough (13") for all three, see Fig. 6. To make the roof slope, tilt the blade (15°) and lock the rip fence ¼" from the blade. Then rip bevels off both edges. For the engine, cut off a piece 2¼"-long and glue it to the top of the cab.

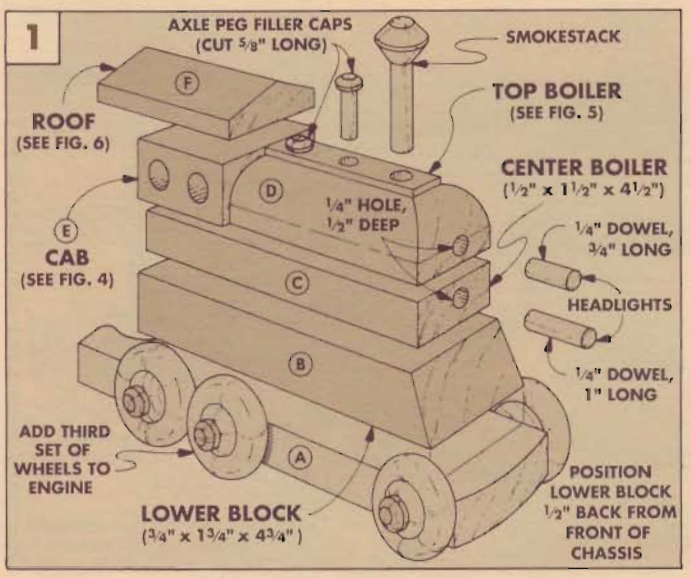

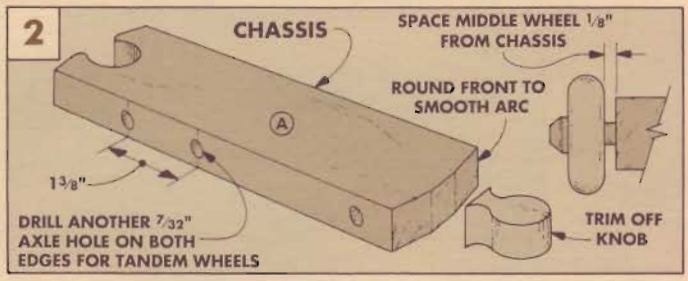

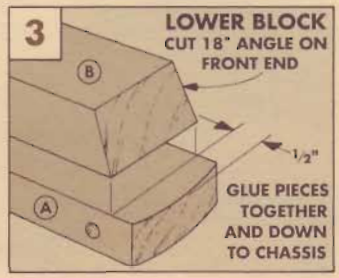

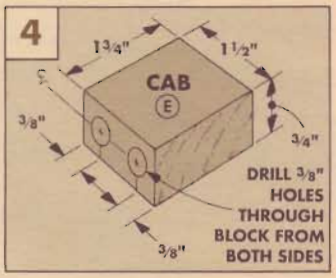

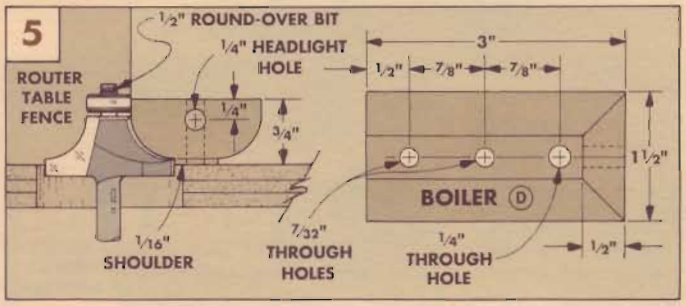

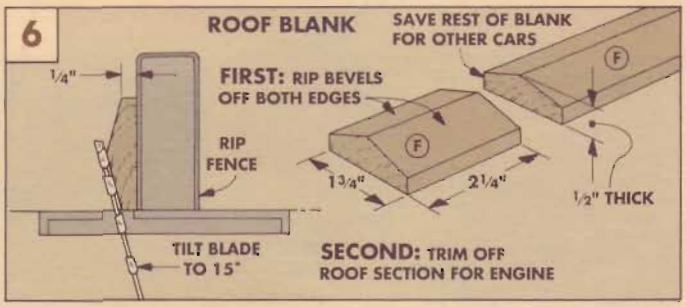

COAL CAR

The coal car is the easiest to build (and the most fun to play with since it can be loaded with all types of cargo). It's just a box glued to the top of the chassis (A).

CUT PIECES TO SIZE. Begin by resawing a 13"-long blank ¼"-thick for the walls. Then rip this blank 1" wide.

Next, cut the two **side walls (G)** 4¾" long and the two **end walls (H)** to fit between the side walls, see Fig. 7.

ASSEMBLY. Now, glue the box together, and glue it down to the chassis, see Fig. 7.

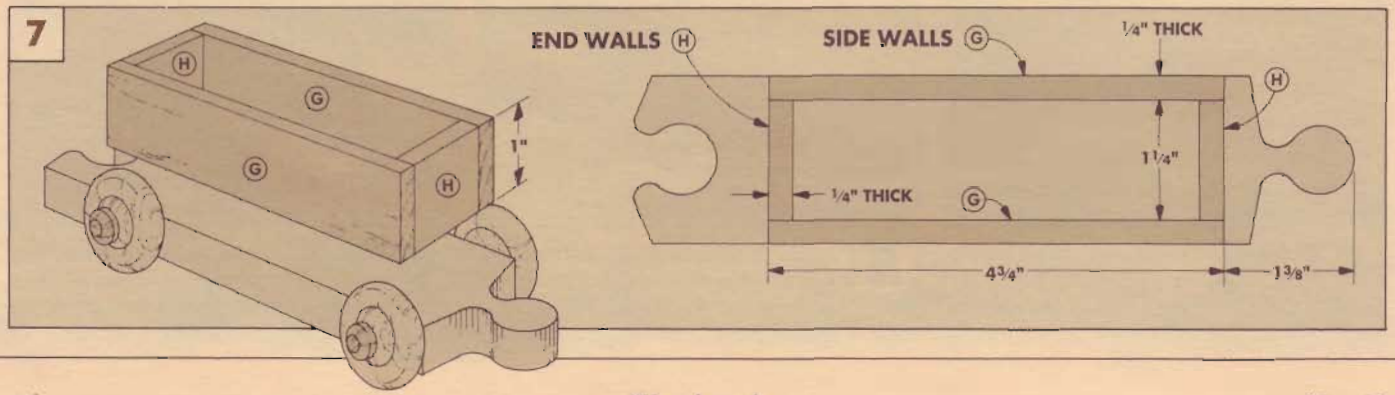

PASSENGER CAR

To make the passenger car, rip ¾"-thick pieces for the **bottom block (I)** and **window block (J)** to the same width as the chassis (1¾"). Then, cut the bottom block (I) 4¾" long and the window block (J) 3¾" long.

DRILL WINDOW HOLES. To offer the passengers an outstanding view of the passing scenery, I drilled five ⅜" window holes through the window block, see Fig. 9.

ROOF. Finally, cut off a 4¾" length of the roof stock (left from the engine, refer to Fig. 6) and glue all the pieces together.

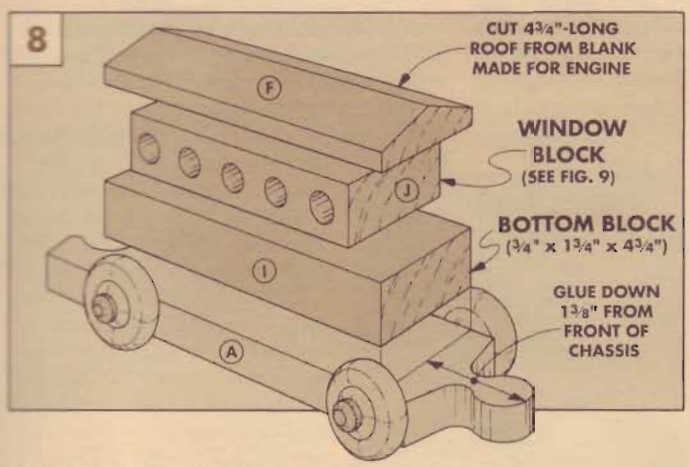

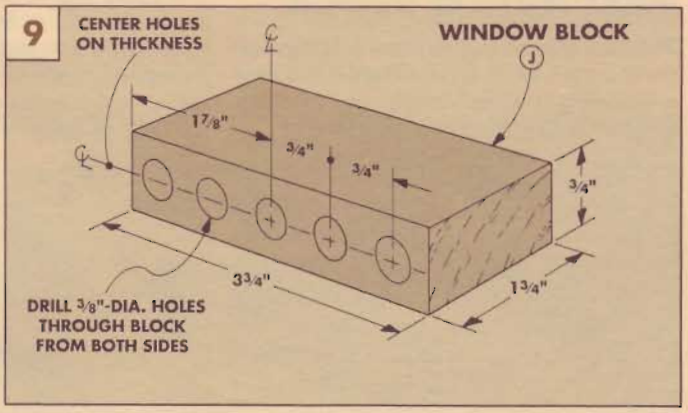

BARREL CAR

Next, I built a barrel car. It's designed to hold turned wooden barrels. (See page 24 for sources of the barrels.)

RACK. To make the **barrel rack (K)**, cut a piece of ¼"-thick stock 1½" wide and 4 13/16" long, see Fig. 11. Next, drill four 1"-dia. holes centered on the width. And then cut ⅝"-wide strips off both edges of the blank.

ASSEMBLY. Now, glue the pieces to the chassis so they're parallel to each other and ⅝" apart. This allows the ribs on the barrels to rest between the racks.

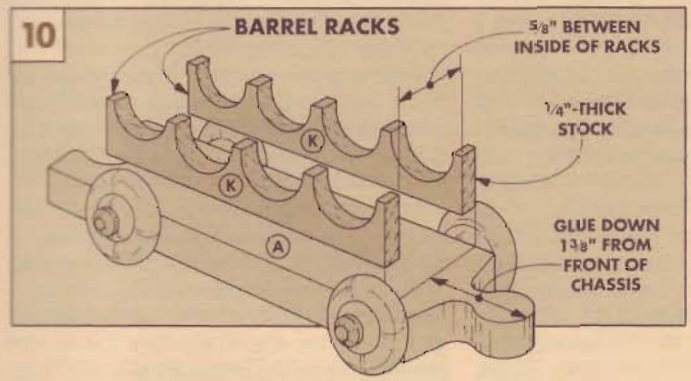

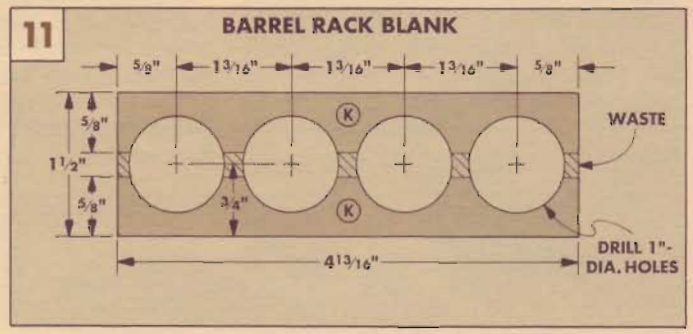

CABOOSE

What would the end of a train be without a caboose? All the parts for the caboose are similar to pieces made for the other cars.

BOTTOM BLOCK. Start by cutting a **bottom block (L)** the same size as on the passenger car and glue it to the chassis, see Fig. 12.

WINDOW SECTION. The **window section (M)** on the caboose is a little narrower (1½" wide) and longer (4⅜" long) than on the passenger car. And there are only four windows on the caboose, see Fig. 12a.

CAB. Next, cut the **cab (N)** and drill the window holes in it. All the dimensions are the same as the cab on the engine except this cab is only 1½" wide to match the window section.

ROOF. Finally, cut three roof sections from the roof blank (F) made for the engine (refer to Fig. 6), and glue them on top of the caboose, see Fig. 12.

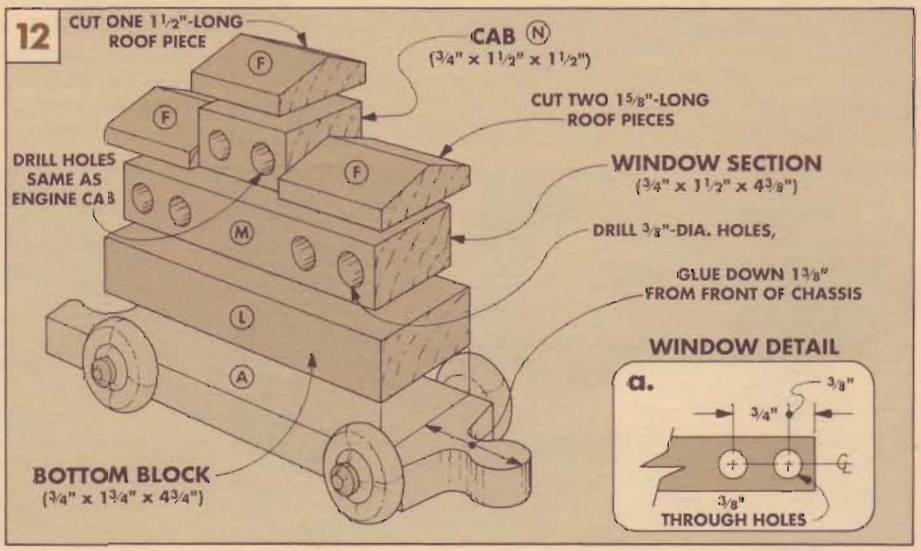

Train Track

PREPARING STOCK

The train can operate on its own, or you can make a track for it. By making both curved and straight sections of track, you can create a wide variety of interesting layouts.

A good way to start is to make eight straight sections (A) and eight curved sections (B). (Eight curves are needed to make a complete circle.) This makes a good size layout, and you can add more sections later (as long as the government approves your merger with another railroad line).

CUT BLANKS. Begin making the track by cutting blanks from ½" stock for the **straights (A)** and **curves (B)**, see Fig. 1.

MITER CURVES. Before cutting the curve pieces (B) to their rounded shape, I mitered the ends of the blanks, see Fig. 2. To do this, attach an auxiliary fence to the miter gauge and set the miter gauge at 22½°. Then miter *one* end of all the blanks.

To set up to cut the other end, turn one of the blanks end-for-end and clamp a stop block to the auxiliary fence, see Fig. 2. Adjust the stop to trim off the blank so it's 10⅞" long on the short side, see Fig. 1. Then cut all the curve blanks (B) to this length.

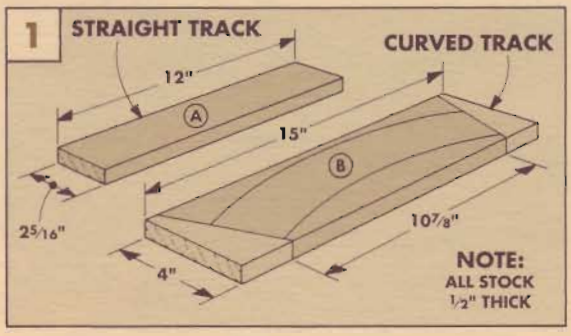

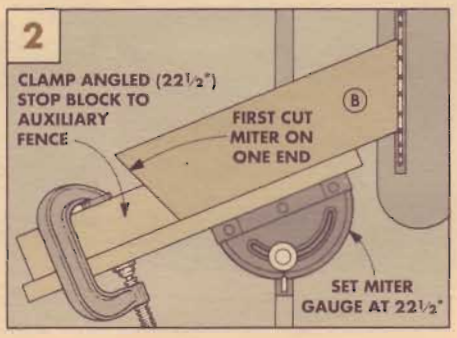

CUTTING THE CURVES

After the miters are cut on the ends of all the curve blanks (B), you can set up to cut the inside and outside arcs.

PIVOT JIG. To accurately cut the outside arcs, I made a pivot jig that sits on top of the band saw. Begin making the jig by cutting a 14" x 18" pivot board from a piece of ¼" plywood or Masonite, see Fig. 3.

Next, drill a ⅛" pivot hole centered on the width of the board and 1" from the end. To help position the blanks on the jig, nail a 10⅞"-long fence to the jig so the *far* edge of the fence is 12¼" from the pivot hole.

Now set one of the curve blanks on top of the jig and align the ends of the blank with the fence, see Fig. 4. Drive small nails at both ends of the blank to hold it in place.

USING THE JIG. To cut the outside curve, I set the jig on top of my circle jig (see *Woodsmith* No. 51). Or, just clamp a piece of ¾" plywood to your band saw table, see Fig. 4.

If you're using the circle jig, position the pivot point 16" from the blade. If you use the plywood base board, drive a nail through the hole in the pivot board and into the base board. (Be sure to align the nail with the *front edge* of the blade.)

With a curve blank in place on the jig, swing the pivot board through the blade and cut off the outside arc of the curve, see Fig. 4. (Save the waste piece from the end of the pivot board. It's used on the next step.)

CUT INSIDE ARCS. After cutting the outside arcs on all the curved pieces and sanding off the tooth marks, you can cut the inside arcs.

To do this I used the curved waste piece (that was cut off the end of the pivot board) as a fence, see Fig. 5. Position the curved piece 2⅜" from the inside of the blade. (This will cut a curve section ⅟₁₆" oversize. After sanding, the curves should end up the same width as the straights — 2⁵⁄₁₆".)

Go ahead and cut all the curve sections to width. Then sand the inside edge (removing at least ⅟₁₆") so the curved sections match the width of the straight sections.

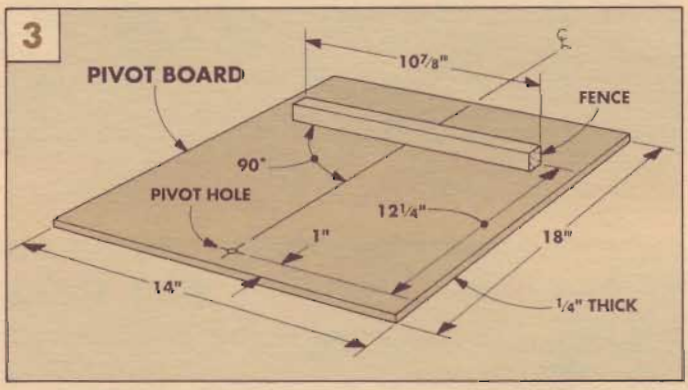

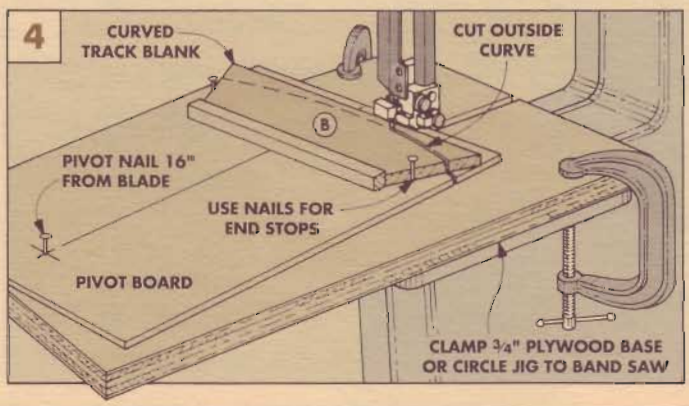

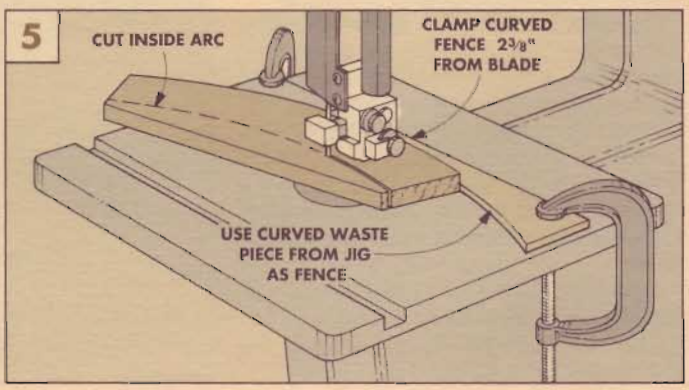

RABBETTING EDGES AND ENDS

To provide a path for the train's wheels to ride in, rabbets are cut on both edges of the track. To do this, raise a 3/8" rabbet bit 1/4" above the router table. Then rout the top edges of all track pieces, see Fig. 6.

END RABBETS. Next, to join the sections of track together, connectors are made that fit under rabbets that are cut in the ends of the track, refer to photo below.

To set up for cutting these rabbets, first mount a 13/16"-wide dado blade on the saw and attach an auxiliary fence to the rip fence, see Fig. 7a. Then bury the blade into the auxiliary fence so 3/4" is exposed.

Now raise the blade up to cut a rabbet exactly deep enough to align with the bottom of the rabbets on the edges, see Fig. 7.

After the saw was set up, I rabbeted both ends of the straight track (A) using a miter gauge to support the workpiece.

On the curved track (B), I backed up the workpiece with curved push blocks, see Fig. 8. (To make the blocks, trace the shape of the curved track onto plywood.)

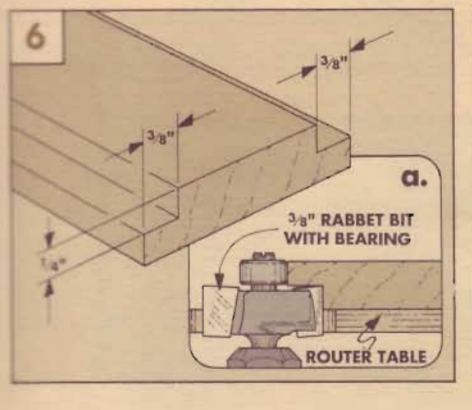

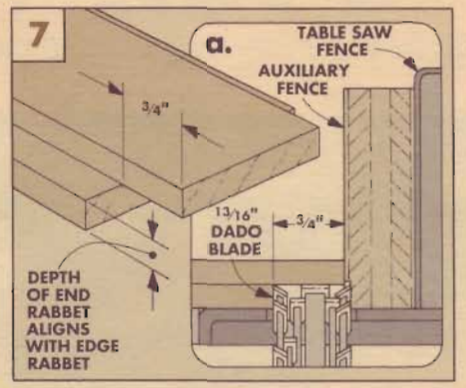

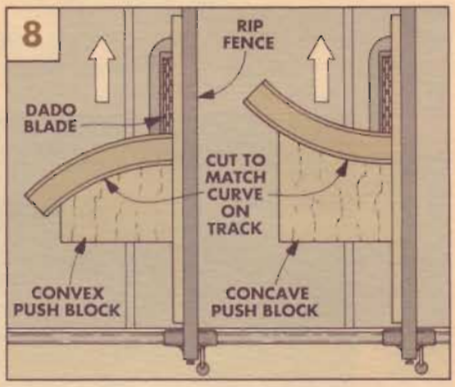

CONNECTORS

To join the pieces of track together, small connectors are made. These connectors are small rectangles of Masonite that fit under the end rabbets in the track, see photo at right. There are two dowels in each connector to fit in holes in the track.

CONNECTORS. Start making the **connectors (C)** by cutting small rectangles of 1/4"-thick Masonite the same width as the track (2 5/16"), see Fig. 9. As for the length of the connectors, they're trimmed down so they're 1/16" less than the distance between the rabbets on the ends of the track pieces. This makes it easier for small fingers to assemble the track pieces.

SET UP FOR DRILLING. Next, set up the drill press to drill 3/8" holes in the connectors and the track. To do this, make a holding fence by nailing two stop blocks to a piece of 2x4. Position the blocks so the connector fits snugly between the stops, see Fig. 10.

Now clamp the 2x4 to the drill press table as a fence. Position the fence so the bit is centered between the stop blocks, and the fence is 3/8" from the point of the bit.

DRILL THE CONNECTORS. Now drill 3/8"dia. holes, 3/16" deep on both edges of the connectors (C), see Fig. 10. When drilling, push the connector tight against the fence.

DRILL THE TRACK. To drill the matching holes in the track, use the same set-up, except you have to add a 1/4"-thick spacer to fit under the rabbet in the end of the track, see Fig. 11. The trick here is to cut the spacer 13/16" wide (which is 1/16" wider than the length of the rabbet on the end of the track). When the track is pushed against the spacer, the hole will be positioned to create a gap between the ends of the track. (Again, this is to make it easier to assemble.)

DOWEL PINS. The last step in making the connectors is to cut 3/8"-long dowels and glue them into the holes in the connectors, see Fig. 9.

TRACK SHAPES. The track can be layed out in a variety of shapes, especially if more

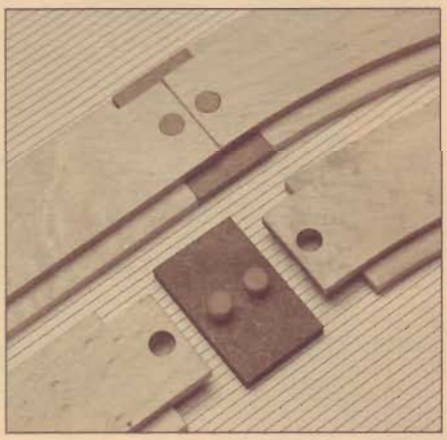

pieces are added. However, one layout might cause a problem. If you make a sharp "S" shape, the train's cars will probably bind when going through the "double-twist" curve. To prevent binding, add a straight section as a transition *between the two C-curves* that turn in opposite directions.

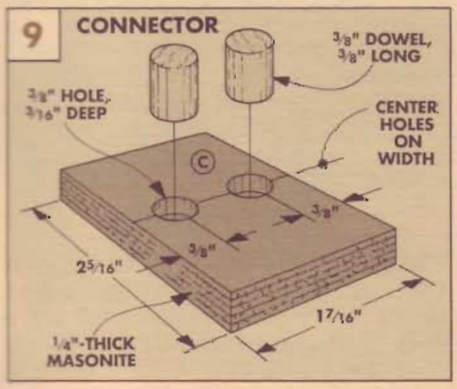

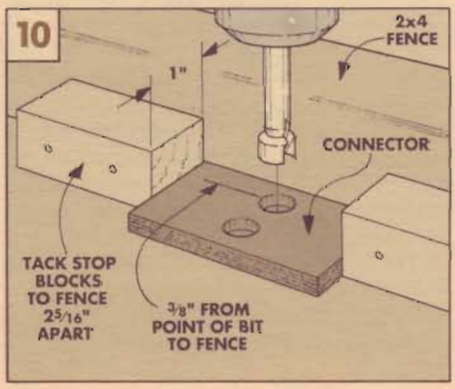

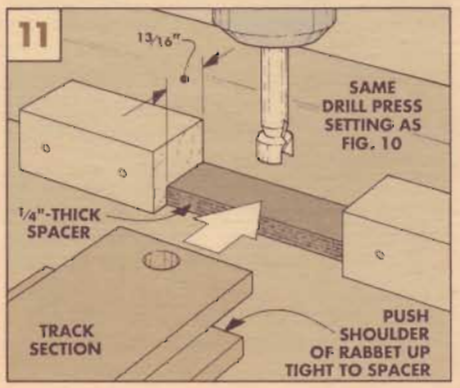

Oval Box

The beauty of this oval box is the beveled-edge mirror that inspired it. The challenge was to figure out a way to make the box fit the exact shape of the mirror.

Ovals are pleasing shapes — but very difficult to draw. When I decided to make an oval box, I had two choices. I could get an oval template from an art store. Or, I could trace something that already had an oval shape.

The choice was easy when I ran across a source for a beautiful beveled-edge oval mirror, see Sources on page 24. With the mirror in hand, I made an oval box that matched its shape. This involves making a template to cut a recess in the lid for the mirror. While I was at it, I used the same template to rout a matching oval recess in the base.

Design Note: If you don't want to use the mirror, but still want to make a box with an oval recess in the base, just get an oval template from an art store and trace the shape on a piece of ¼" Masonite. Then cut it out and sand it as shown in Step 8 on the next page.

There's another option, too. You can make a rectangular box on the outside and only rout the oval inside the base. This gives you a few more options for adding a carving or inlay to the lid of the box.

MAKING THE TEMPLATE

Okay, back to the mirror and template. To make a template to rout a recess for the mirror, the first step is to trace the shape of the mirror on a piece of paper, see Step 1.

FOLD ON AXES. In order to align the oval shape on a template, you have to determine the two axes of the oval. There's a neat trick to do this. Just hold the paper up to a light, see Step 2. The light allows you to see the oval curve on both sides of the paper. Adjust the paper until the curves align, and fold the sheet in half.

The fold line indicates one axis of the oval. Fold the sheet in half the other way to get the other axis. (These axis lines are particularly important for aligning the oval in a rectangular box.)

MARK MIRROR. Now you can use the folds in the paper to mark the points where the axis lines meet the edge of the mirror, see Step 3.

LAY OUT TEMPLATE. After marking the axis lines on the mirror, the template can be cut from a piece of ¼" Masonite. (The template shown in Step 4 is sized to accept the oval mirror.)

After cutting the template to size, mark two cross lines, see Step 4. Now align the marks on the edge of the mirror with the cross lines on the template, see Step 5. To hold the mirror steady, use a piece of double-sided carpet tape to attach it to the template.

GUIDE BUSHING

The idea of all this is to use the oval shape of the mirror to make a guide template for a router. This template is then used with a guide *bushing* that's mounted to the base of the router, see Step 6.

Almost all router manufacturers offer a guide bushing (or template guide) that fits on the base of their router. This guide bushing extends below the base of the router so it can rub against the edge of a template. The idea is for the guide bushing to follow the shape of the template while the router bit (that fits inside the guide bushing) actually does the cutting.

There's one consideration here. The router bit cuts a path that's *inside* the edge of the bushing. I used a standard bushing with an outer diameter of 7/16". This bushing fits around a 1/4" straight bit. Thus, the bit will cut 3/32" from the outside edge of the bushing, see Detail in Step 6.

If you want an *exact* fit, make the template 3/32" larger than the mirror. However, I made the template 1/8" larger than the mirror. This creates a 1/32" space around the edge of the mirror to allow for expansion of the wood around the mirror, see Step 7.

Shop Note: I used a piece of cardboard to trace the line 1/8" outside the perimeter of the mirror. See Shop Notes on page 12 for more on this technique.

CUT TO SHAPE. To complete the template, cut out the inside to rough shape with either a sabre saw or a coping saw. Then sand the edges smooth right up to the marked line with a drum sander mounted in your drill press, see Step 8.

INDEX HOLES. This template will be mounted to the lid, and then to the base to rout out the oval shape. To align the template on both pieces, I drilled two 3/16" index holes, see Step 9. These holes are also used later to locate and drill holes in the lid and base for index pins to keep the lid from sliding off the base, refer to Fig. 14.

FINISH. I finished the lid and the outside of the oval box with General Finishes' Two-Step Sealacell system. After finishing, I added a piece of felt to the inside bottom of the box.

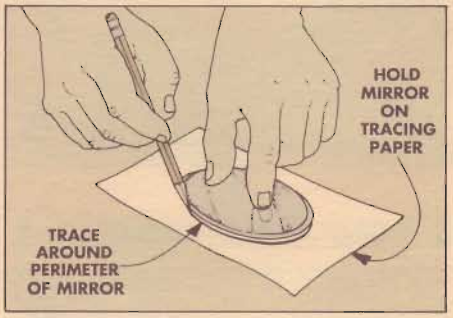

1 *To make a template for an oval mirror, lay the mirror on a sheet of paper. Then trace around the perimeter of the mirror with a sharp pencil.*

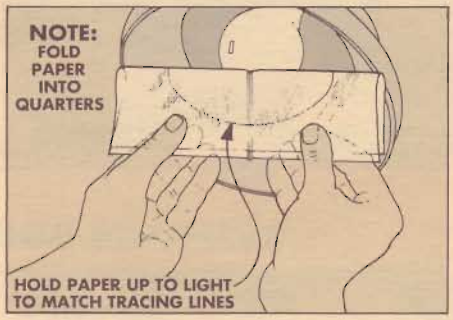

2 *To determine the two axes of the oval, hold paper up to a light and align the curves. Then fold paper in half to get one axis. Fold it the other way for the other axis.*

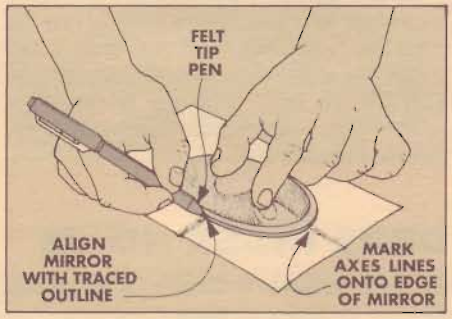

3 *Unfold the paper and realign mirror on the traced outline. Then use a felt tip pen to mark where the axis lines touch the edge of the mirror.*

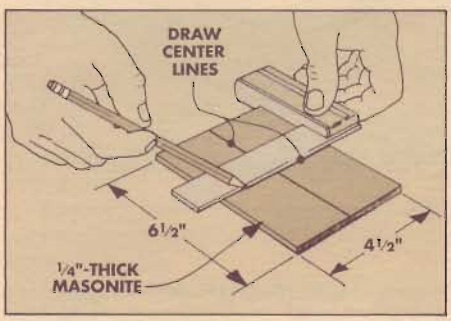

4 *The template is made out of a piece of 1/4" Masonite. Cut it to size (6 1/2" long by 4 1/2" wide) and use a square to draw center lines in both directions.*

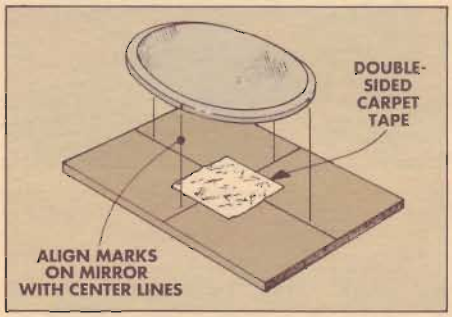

5 *To align the mirror on the template, match the marks on the edge of the mirror to the center lines. Hold the mirror down with a piece of double-sided tape.*

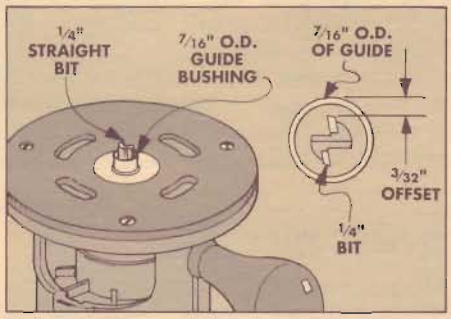

6 *The template has to be sized to take into account the difference between the outside diameter of the bushing and the outside diameter of the bit (3/32").*

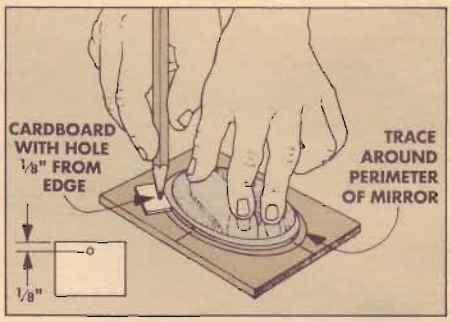

7 *Use a piece of cardboard to trace a line 1/8" outside the perimeter of the mirror. (1/8" Allows 3/32" for the bushing plus 1/32" around mirror for expansion.)*

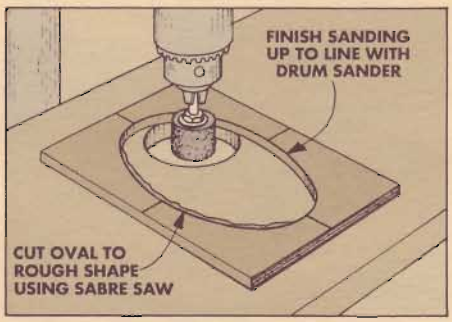

8 *Cut around the inner perimeter of the template with a sabre saw or coping saw. Then sand carefully up to the line with a drum sander.*

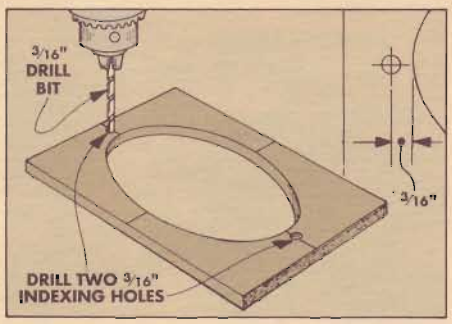

9 *To align the template, drill 3/16"-dia. index holes on both ends of the long axis. Center the index holes 3/16" from the edge of the oval hole.*

PREPARE THE BLANKS

I started building the box by cutting a blank for the **lid (A)** from ½" stock to match the size of the template, see Fig. 1. The base is made by gluing up two pieces: a ¾"-thick **base (B)**, and a ½"-thick **bottom (C)**.

Shop Note: If you can find 6/4 stock (that is 1 5/16" thick), you can cut the base out of a solid piece rather than laminating two pieces together. (See Sources, page 24.)

LAMINATE. If you have to laminate two pieces to get the thick base, cut both pieces a little oversize. Then glue them together. When the glue is dry, trim the edges down to final size.

MARK PIECES. Before proceeding, I sandwiched the template between the lid and the base blank, see Fig. 2. Then I drew a carpenter's triangle on the end of this assembly. This triangle helps align the pieces when drilling the holes for the alignment pins, refer to Figs. 3 and 4.

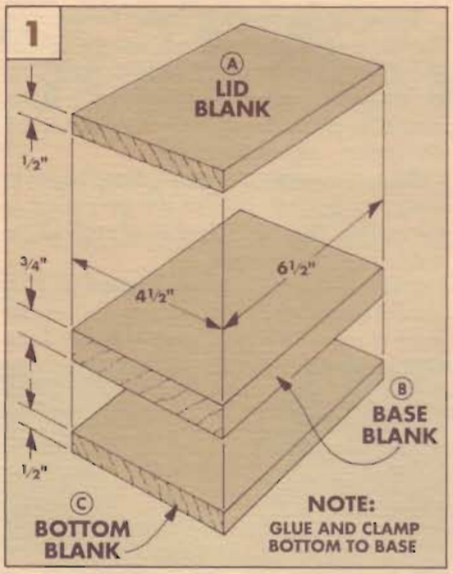

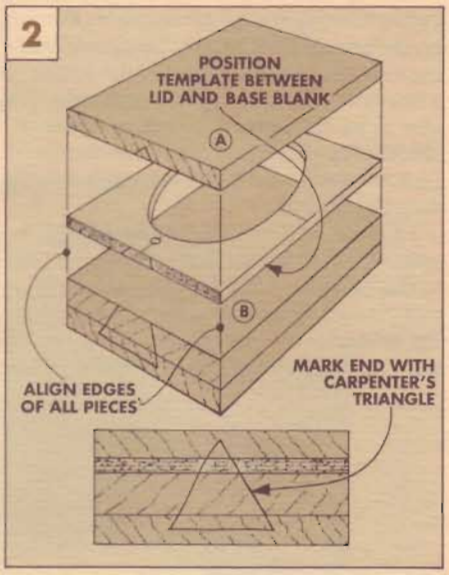

DRILL INDEX HOLES

The next step is to drill holes in the lid and base for the indexing pins.

HOLES IN LID. Start by lifting the lid and template off the base. Then flip these two pieces over so the template is facing up and tape them together, see Fig. 3.

Now with a 3/16"-dia. bit, drill holes ⅛" deep into the lid at each end using the holes in the template as a guide.

HOLES IN BASE. Repeat this procedure on the base. Just place the template on the base so the sides of the carpenter's triangle align properly, see Fig. 4.

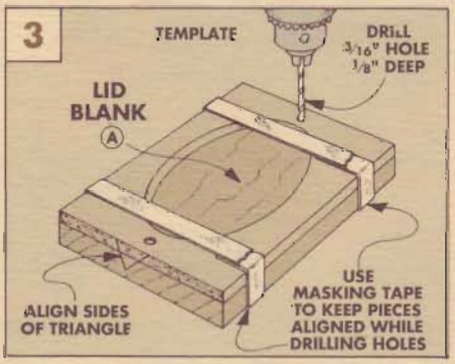

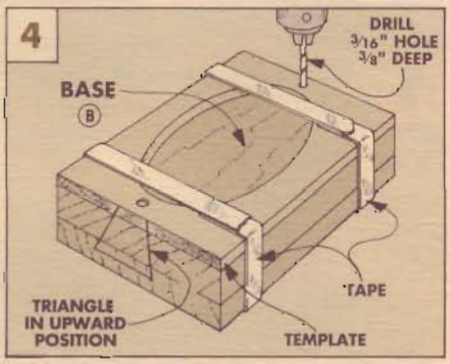

ROUT RECESS

The index holes are used first to align the template to the lid to rout a recess for the mirror, see Fig. 5. Tap index dowels (3/16"-dia.) into the holes, but don't glue them in.

ROUT LID RECESS. To rout out the recess in the lid, use a ¼" straight bit and a 7/16" guide bushing. Set the bit deep enough so the face of the mirror will be flush with the edge of the lid (about a 3/32"-deep recess).

Remove the waste by plunging the router into the center of the lid and moving it in a clockwise pattern until you reach the perimeter of the template, see Fig. 5.

When you're done, there should be a 3/32"-wide lip inside the edge of the template, see Fig. 6. The mirror should fit inside this lip with about 1/32" space all around.

ROUT BASE. Next rout out the base of the box the same way, but to a depth of 1". I did this by making a series of passes about ¼" deep each time, see Fig. 7.

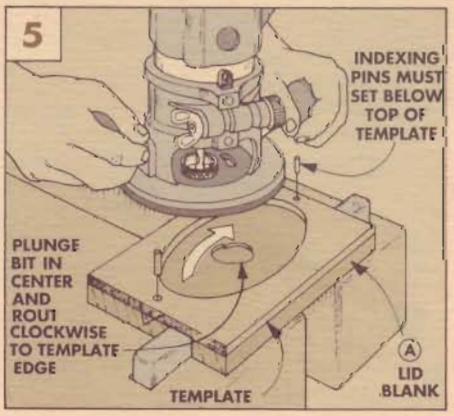

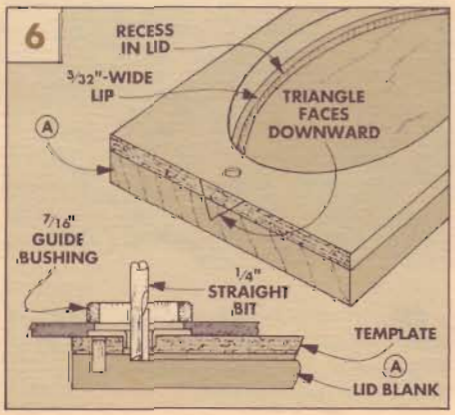

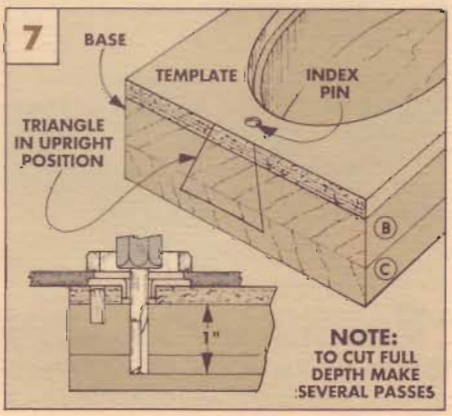

SHAPE OUTSIDE OF OVAL

At this point, the inside of the box is complete. The next step is to shape the outside of the box to an oval shape as well.

TRACE OVAL. The procedure is to lay out an oval shape on the outside of the box a little larger than the inside oval. To do this, I used a compass to trace the shape of the oval on the lid. Set the compass points 5/8" apart. Then place the point of the compass in the recessed oval in the lid and trace the shape, see Fig. 8.

CUT LID TO SHAPE. Now cut the lid to rough shape on a band saw and sand it carefully right up to the line with a drum sander or on a belt sander.

CUT BASE TO SHAPE. After sanding the lid to shape, place it on the base using the index pins to align the two pieces, see Fig. 9. Now use the lid as a template to trace the oval onto the base, and cut it out to rough shape on a band saw.

SAND TO LINE. To get the base to the same shape as the lid, sand them together with a drum sander or on a belt sander, see Fig. 10.

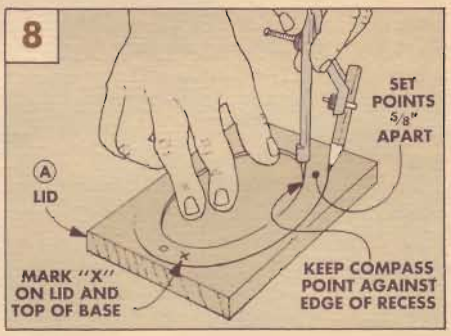

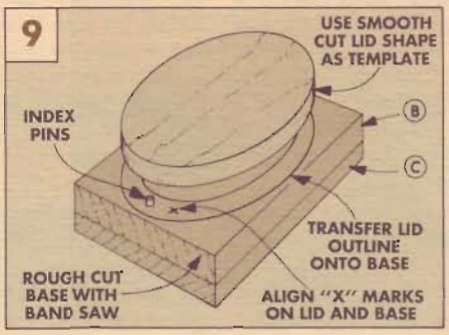

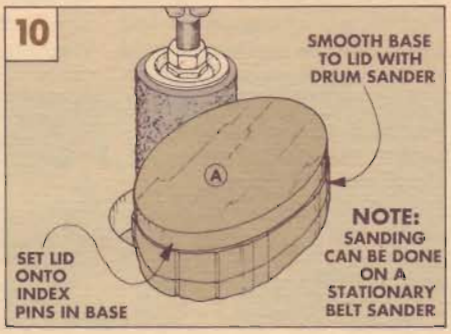

SHADOW LINE AND EDGE PROFILES

The oval box is complete at this point — except for routing profiles on the top edge of the lid and the bottom edge of the base.

SHADOW LINE. However, before I did that, I added a shadow line between the lid and the base. If either piece warps, this line adds enough depth so the crack between the lid and base is not so visible.

AUXILIARY FENCE. To rout this shadow line, mount a 1/2" straight bit to the router table and set the bit 3/32" high, see Fig. 11a. Then I clamped an auxiliary fence (a piece of 3/4" plywood) to the front of the router table's regular fence.

Now turn on the router and slide the auxiliary fence into the bit to rout an opening the width of the bit.

To rout the shadow line, turn the router off and adjust the fence so the bit extends 3/32" out, see Fig. 11a. Then rout a rabbet on the *top outside edge* of the base only to produce the shadow line, refer to Fig. 14a.

ROUND OVER INSIDE EDGE. After routing the shadow line, I switched to a 1/4" round-over bit and rounded the *inside* edge of the base, see Fig. 12.

OUTSIDE PROFILES. The outside edges of the base and the lid can be routed to several shapes. I used a 1/4" round-over bit, to achieve a simple and graceful look. (Before using other bits, check that their profiles won't cut into the holes for the index pins.)

INDEX PINS. After the edges are routed, I cut two new index pins to fit the holes in the base, see Fig. 14a.

GLUE MIRROR. Before finishing the box, mount the mirror into the recess in the lid using a silicone sealant. I also added a piece of felt to the inside bottom of the box and felt dots to the outside bottom of the box.

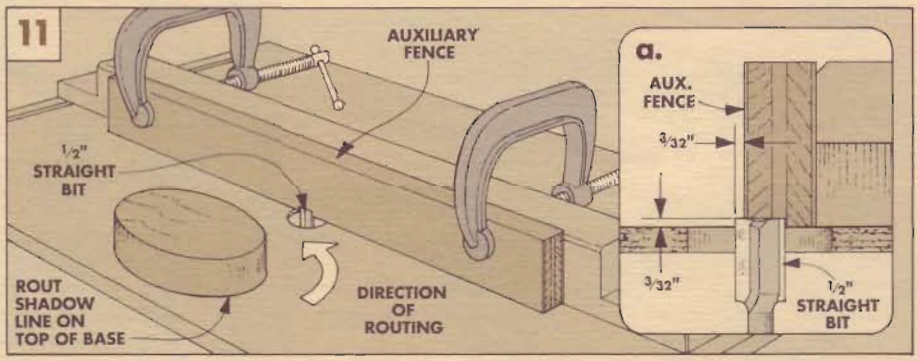

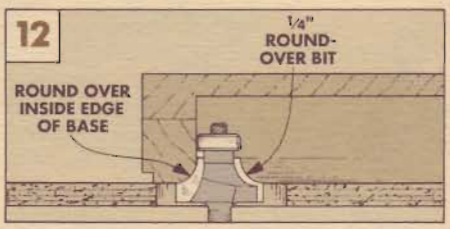

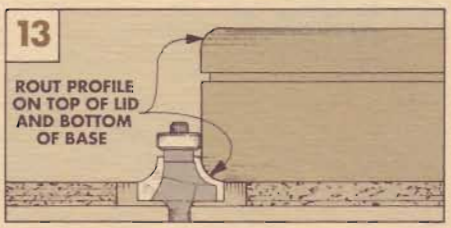

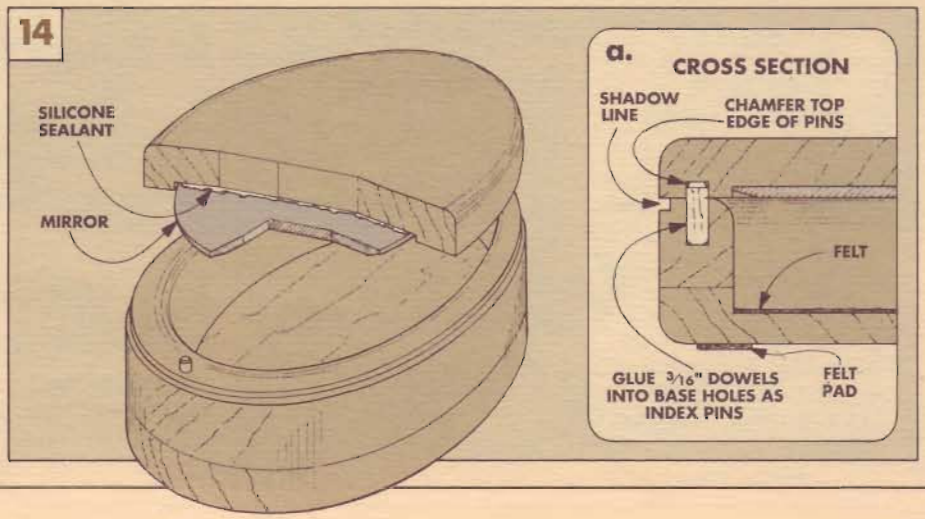

Sources

ROCKING HORSE

Woodsmith Project Supplies is offering a full-size pattern and the hardware needed to build the Rocking Horse shown in this issue. The pattern provides cutting diagrams for all wood and leather parts including instructions on forming the leather into the saddle and adding the bridle.

- **765-150** Rocking Horse Pattern $7.95
- **765-100** Rocking Horse Pattern & Hardware Kit..... $49.95
  - (1) Full Size Pattern
  - (25) 1" Nails (Ovalhead, Stainless Steel, Spiral-Shank)
  - (25) ¾" Staples to attach the mane and tail
  - (2) Craft Glass Eyes (brown), 24mm dia. (approx. 1")
  - (1 Skein) 4-Ply Yarn (brown)
  - (20) #8 x 1 ¼" Screws
  - (16) #8 x 2" Screws
  - (32) ⅜" Wood Plugs for Screw Holes
  - (1) Pre-Cut Leather Saddle
  - (2) Pre-Cut Leather Ears
  - (1) 1" x 18" Leather Cinch Strap
  - (1) ½" x 72" Leather Bridle Strap
  - (2) ¾" dia. Nickle-plated D-rings For Bridle
  - (2) 1" x 10" Dowels

Other suppliers for the leather and craft glass eyes are listed below. Look for code *RH* following their address.

TOY TRAIN

Woodsmith Project Supplies is offering the materials and hardware needed to build the five-car Toy Train and Track featured in this issue.

Other suppliers who carry toy train parts are listed below. Look for the code *TT* following the supplier's name.

- **765-200** Five-Car Train, Parts Only..... $6.95

The kit above includes all the parts (but no lumber) needed to build five train cars:

- (22) 1¼" x 7/16" Wheels
- (24) ¼" Wheel Axle Pegs
- (1) ⅝" x 1½" Smoke Stack (tenon fits ¼" hole)
- (1) ¼" Dia. Dowel, 6" long
- (4) Oil Barrels

- **765-225** Five-Car Train, Parts & Lumber $18.95

This kit contains all the parts listed above, plus the lumber (maple) to make five cars:

- (1 pc.) 3¾" x 17"; ¾"-thick
- (2 pcs.) 3¾" x 17"; ½"-thick
- (1 pc.) 1½" x 18"; ¼"-thick

- **765-250** Train Track Parts & Lumber $39.95

This kit contains enough maple to produce eight curved and eight straight track sections.

- (8 pcs.) 2 5/16" x 12"; ½"-thick
- (8 pcs.) 4" x 15"; ½"-thick
- (16 pcs.) 2 5/16" x 1 7/16" Masonite; ¼"-thick
- (2) ⅜" x 12" Dowels

NON-TOXIC FINISHES

You will want to use a non-toxic finish on the Toy Train and Track project. Ordinarily, I like to use a salad bowl finish on toy projects, but for the train I discovered this finish was just too thick to *seep* in and around all the small parts of the train. Instead, we used a finish called Preserve Nut Oil and found it to be an ideal finish for the train set.

Preserve is a blend of natural oils from exotic nut meats and provides an excellent, non-toxic finish for toys as well as bowls and wooden kitchen utensils.

There are other finishes that will also provide a non-toxic finish and are still thin enough to flow over the small train parts. Two of these — General Finishes' Two-Step Sealacell System and Watco's Danish Oil — are both non-toxic when "cured." (According to their manufacturers, this can take from two to four weeks.)

Non-toxic finishes for the toy train project are available from **Woodsmith Project Supplies**, or from the sources listed below. Look for the code *NT* following the supplier's name.

- **765-275** Preserve Nut Oil Finish, 8-oz. $8.95
- **518-203** General Finishes' Two-Step System..... $10.95
  - ½ Pint Step #1 (Sealer)
  - ½ Pint Step #2 (Finish Coat)

OVAL BOX

The materials needed to build the Oval Box are available from **Woodsmith Project Supplies**.

The oval mirror and silicone sealant can be ordered using the numbers below. (We recommend using Dow's silicone sealant to attach the mirrors since some other silicones may damage the silvered backs.)

- **765-300** (1) 3" x 5" Beveled Oval Mirror $5.95
- **765-305** (3-oz. tube) Dow Silicone Sealant (enough to attach 80 to 100 mirrors) ... $3.29

Also available are lumber kits in your choice of several different hardwood species. Each kit includes the following items:

- (1 pc.) 4½" x 6½"; ½"-thick lumber (to make the lid)
- (1 pc.) 4½" x 6½"; 15/16"-thick lumber (to make the base)
- (1) 3/16" Dowel, 4" long

- **765-310** Oval Box, Kit of Lumber — Oak $7.95
- **765-320** Oval Box, Kit of Lumber — Walnut $8.95
- **765-330** Oval Box, Kit of Lumber — Cherry $8.95
- **765-340** Oval Box, Kit of Lumber — Padauk..... $12.95

(Padauk is an exotic, red-orange hardwood that turns deep maroon on exposure to sunlight. Padauk's sawdust can be irritating, so using a dustmask is advised.)

ORDER INFORMATION

BY MAIL

To order by mail, use the form on the protective cover of a current issue or write your order on a piece of paper, and send it with your check or money order. (Please include $1.50 shipping charge with each order.) IA residents add 4% sales tax. Send order to:

Woodsmith Project Supplies
P.O. Box 10350
Des Moines, IA 50306

BY PHONE

For faster service use our Toll Free order line. Phone orders can be placed Monday through Friday, 8:00 AM to 5:00 PM CST.

Before you call, have your VISA or Master Card ready.

1-800-444-7002

Allow 4 to 6 weeks for delivery. Note: Prices subject to change after 9/90.

ALTERNATE CATALOG SOURCES

Similar hardware and supplies may be found in the following catalogs. However styles and sizes may vary. Please refer to each catalog for ordering information.

Van Dyke's Restorers
P.O. Box 278
Woonsocket, SD 57385 ..... *RH*

Tandy Leather
P.O. Box 791
Fort Worth, TX 76101 ..... *RH*

Shopmith, Inc.
3931 Image Drive
Dayton, OH 45414..... *TT, NT*

Cherry Tree Toys, Inc.
P.O. Box 369
Belmont, OH 43718..... *TT, NT*

Woodcraft Supply
P.O. Box 1686
Parkersburg, WV 26102 . *TT, NT*

Bridge City Tool Works
1104 N.E. 28th. Ave.
Portland, OR 97232 ..... *NT*